EMO®

June 20, 2013

Bobby I.T. Chen
Client Program Manager

Shaw Group is now Chicago Bridge & Iron

- Chicago Bridge and Iron (CB&I) has completed the acquisition of the Shaw Group.
- The effective date of the transaction was February 14, 2013.
- The combined organization brings the capabilities and experience of over 50,000 employees to the marketplace.
- Even though Shaw will undergo many changes under our new company, the people remain and will provide the same level of service and dedication to clients as before.

MATS Overview

Subcategory	Total Filterable Particulate Matter **(PM)**	Hydrogen Chloride **(HCl)**	Mercury **(Hg)**
Existing coal-fired unit designed for coal **> 8,300** Btu/lb	**0.030** lb/MMBtu (**0.30** lb/MWh)	**0.0020** lb/MMBtu (**0.020** lb/MWh)	**1.2** lb/TBtu (**0.010** lb/GWh)
Existing coal-fired unit designed for coal **< 8,300** Btu/lb	**0.030** lb/MMBtu (**0.30** lb/MWh)	**0.0020** lb/MMBtu (**0.020** lb/MWh)	**4.0** lb/TBtu (**0.040** lb/GWh)

- Mercury and Air Toxics Standard (MATS) published on 2/16/2012, which became effective 60 days later. Compliance needs to be demonstrated by the 1st quarter of 2015
- Final PM limit for Filterable PM only (per EPA Method 5)
- Use of the alternate SO_2 limit is not allowed if EGU does not have some form of FGD system and SO_2 CEMS installed.
- Where alternate limits are designated with "or" in Table 2 Section 1 of MATS, these pollutants may be used in lieu of pollutants listed in same subsection (e.g. Total non-HAPs may be used in lieu of Filterable PM).
- The Hg limit is **based on a 30-day boiler operations rolling average**

EMO ® Injection General Arrangements

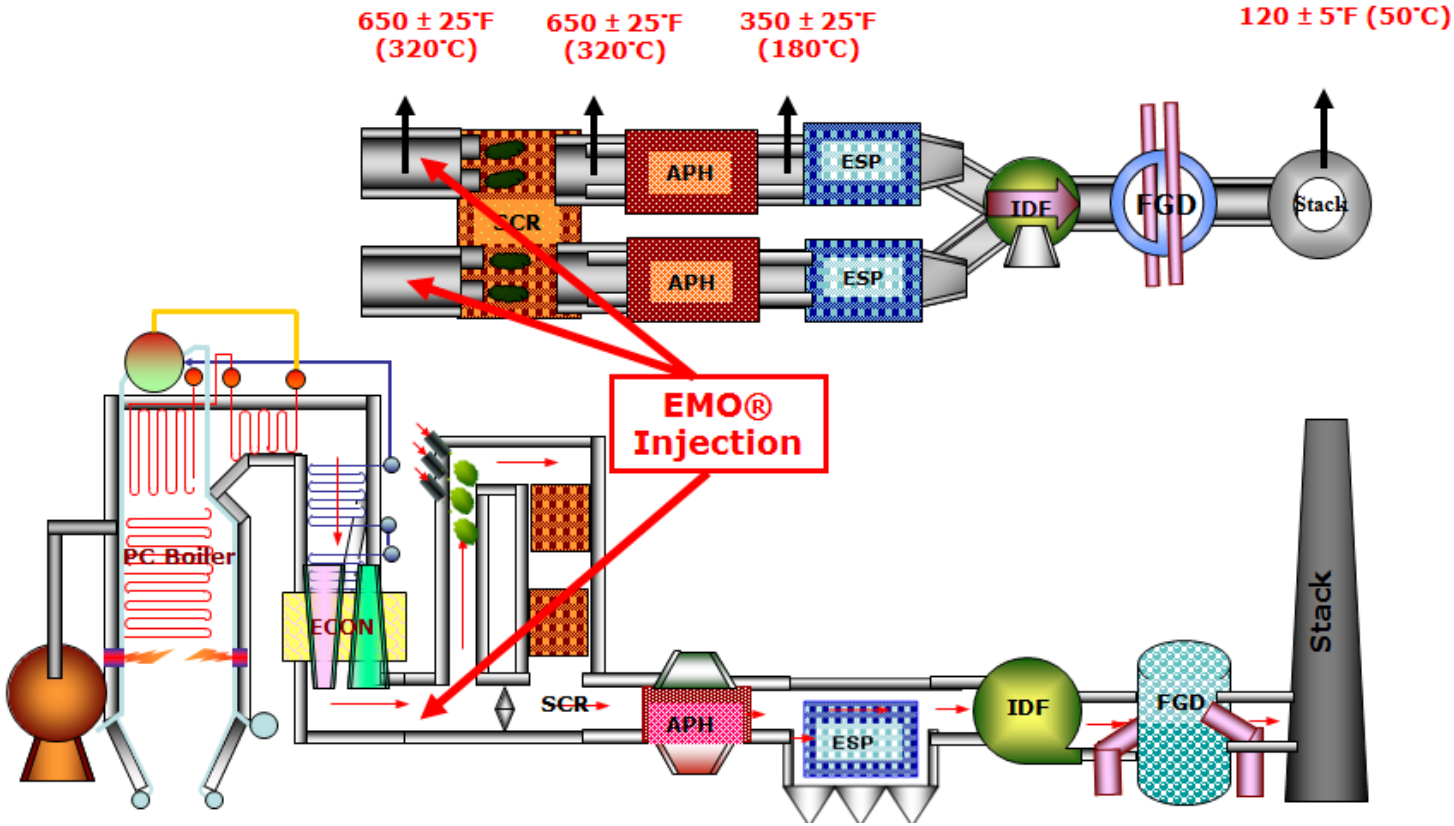

- Injecting chemical: EMO® chemical additives

  Mercury Oxidization: **Hg(0)** → **$Hg^{(2+)}$**

  Mercury Absorption/Adsorption: in the existing PCD and scrubber

- Injection location and temperature: Economizer outlet (**> 650**°F) or PCD outlet (**320**°F)

EMO® Injection General Arrangements

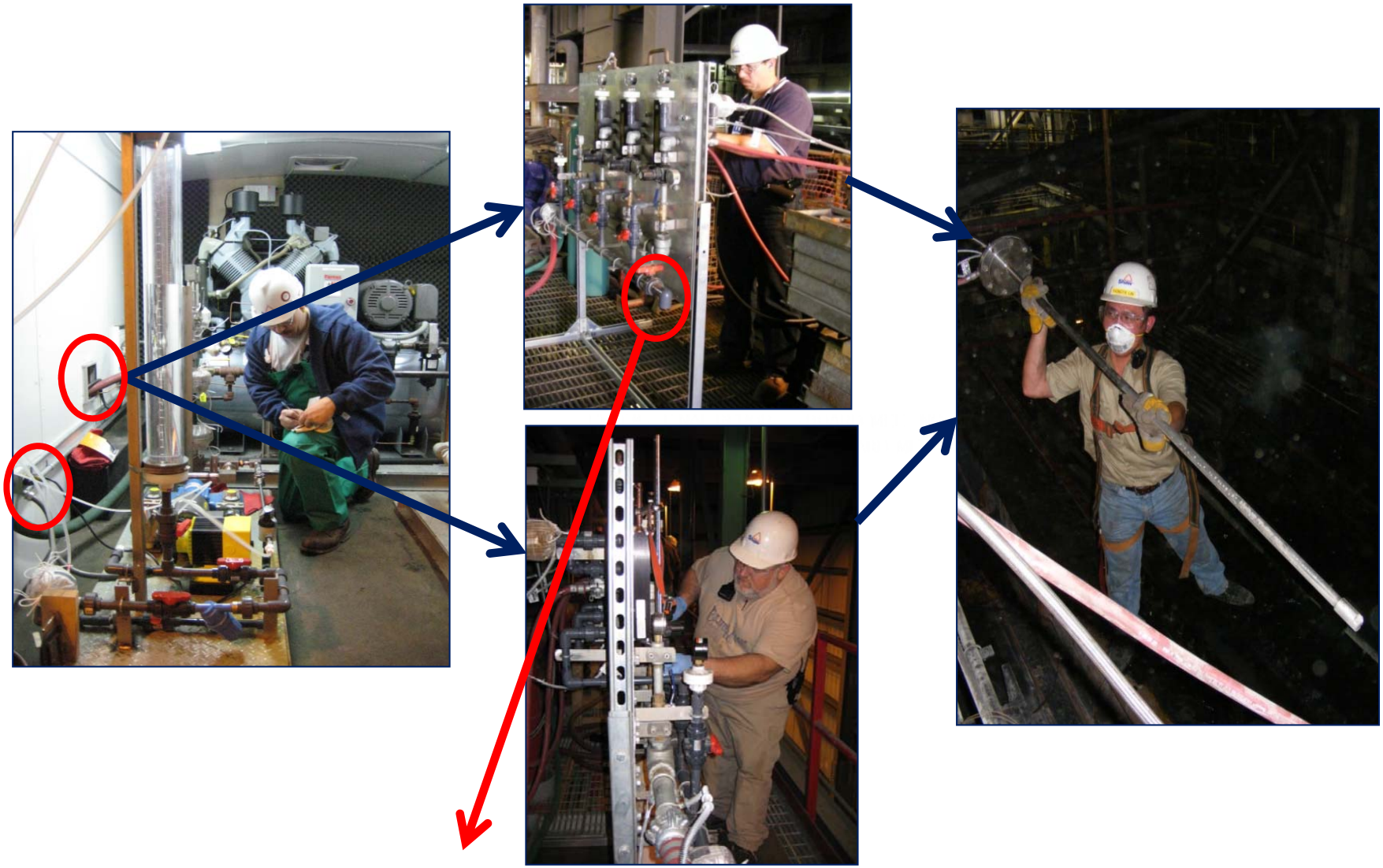

- the **X** ppmv of EMO® injection rate was precisely determined by direct sample titration

Flue Gas Flow Analysis

Air Velocity: ***60 ft/sec***

Air Temperature: ***650 °F***

Liquid Inject Temp: ***80 °F***

Droplet Diameter (micron)	Evaporation Distance (feet)
120	14.1
65	4.8
38	1.2

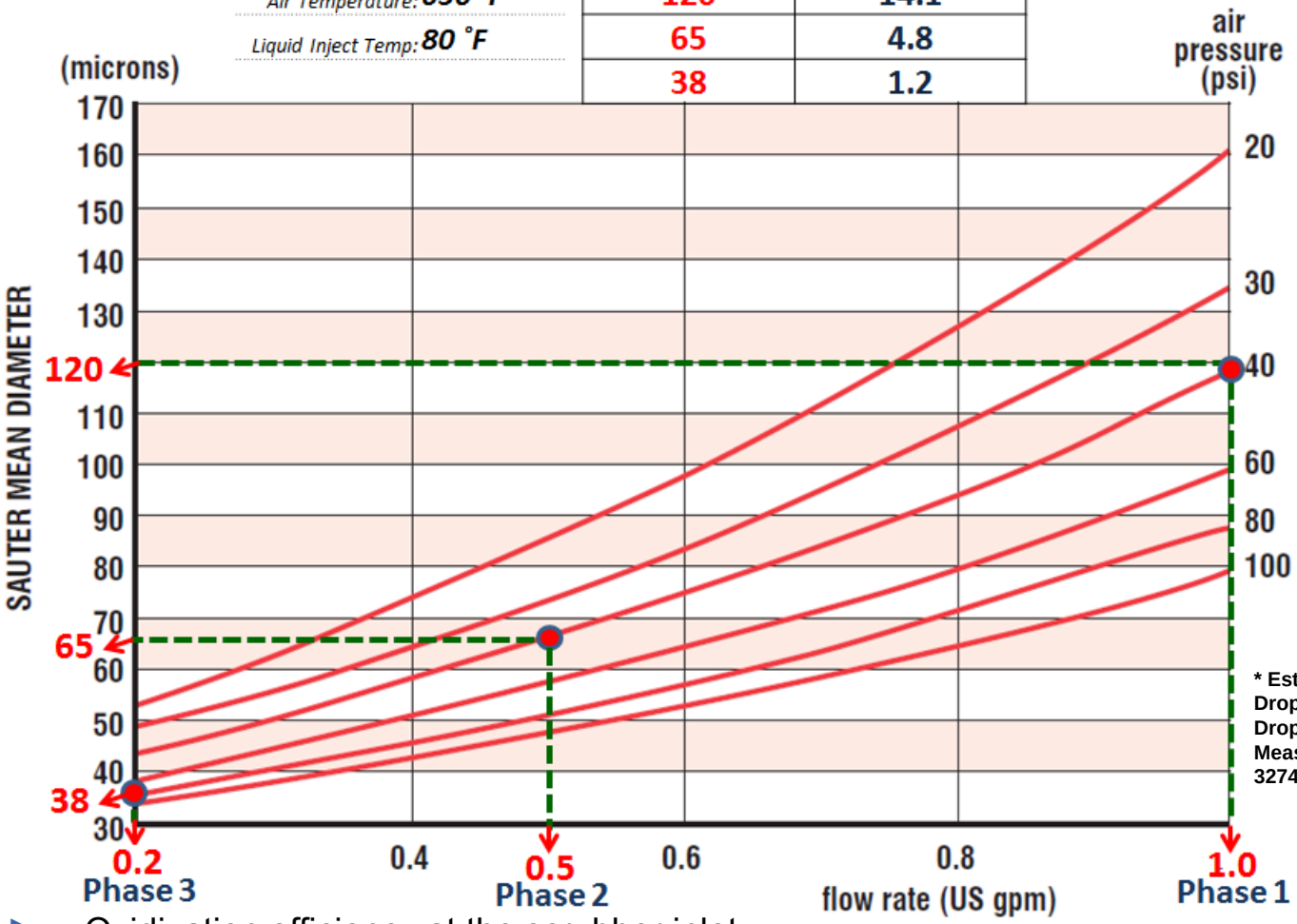

*** Estimated Sauter Mean Droplet Diameters Flow Droplet Diameters – US Measures Swirl-Air Nozzle 32740-4 or 32163-2**

- Oxidization efficiency at the scrubber inlet:

Phase 3: **98**%; Phase 2: **88**%; Phase 1: **80**%;

Reference Unit 1 Testing Arrangement

- 220 MW, ESP only, 100% PRB

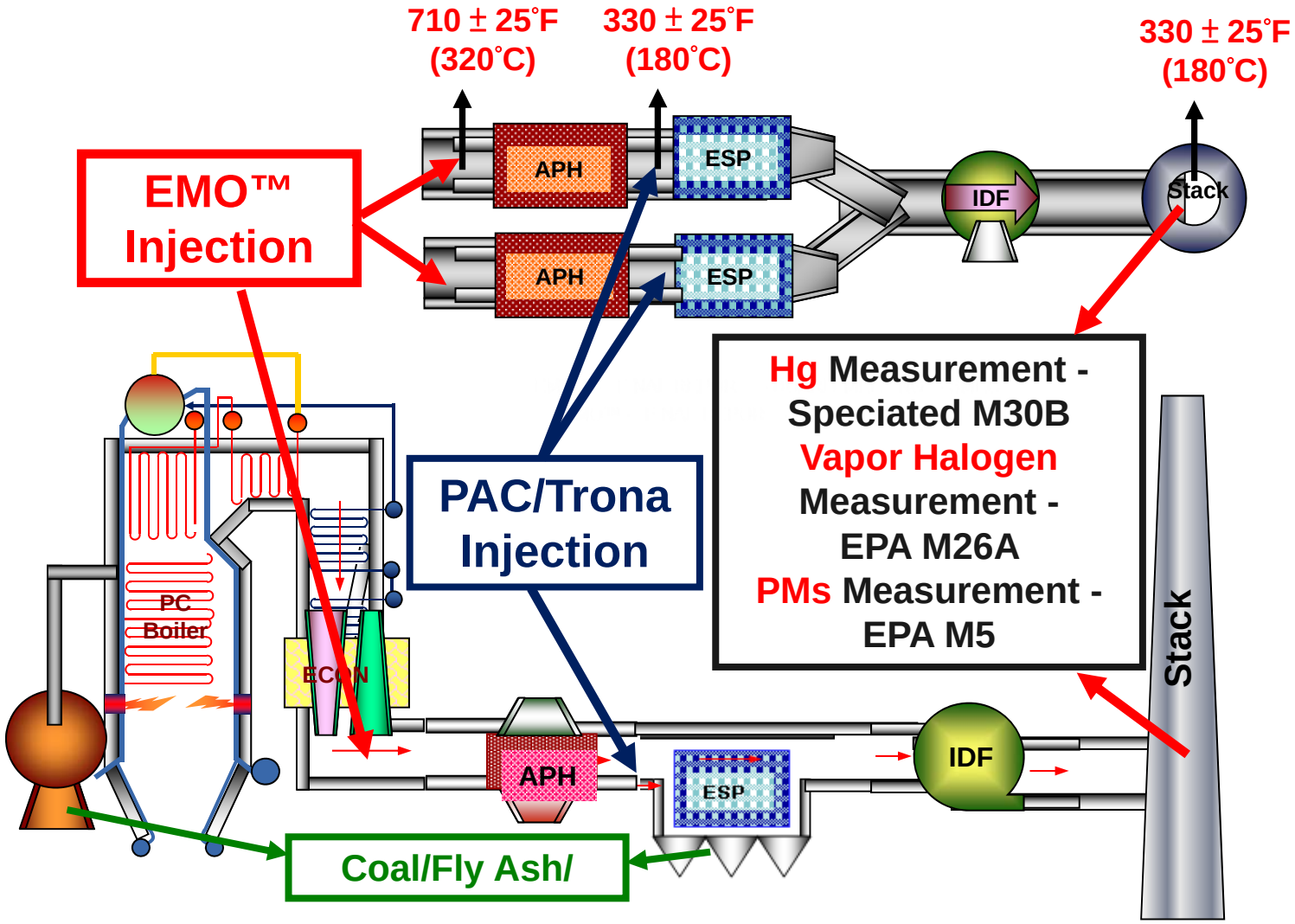

Reference Unit 1 Hg Data Overview

Date	Unit Load	Max. Hg From PRB	EMO™ Injection Rate	PAC Injection Rate	Trona Injection Rate	Stack Hg	Stack Hg	Hg Oxidization at Stack	Overall Hg Removal	NOx	Opacity
mm/dd/yy	(MW)	(lb/TBtu)	(ppmvd)	lb/mmacf	(lb/Hr)	(lb/TBtu)	(lb/GWh)	(%)	(%)	(lb/MMBtu)	(%)
5/27/12	236	7.8	0.0	0	0	7.50	0.07317	3.8%	3.8%	0.044	4.5
	235	7.8	0.0	0	0	7.90	0.07707	6.4%	-1.3%	0.042	4.5
6/7/12	234	7.8	4.4	0	0	1.49	0.01457	97.4%	80.9%	0.043	4.2
	237	7.8	6.5	0	0	1.16	0.01136	97.7%	85.1%	0.045	3.4
6/8/12	235	7.8	5.5	0	1200	3.66	0.03570	91.7%	53.1%	0.045	3.6
6/8/12	235	7.8	10.0	2	1200	0.60	0.00585	99.0%	92.3%	0.045	3.5

- Baseline Hg emission at the Stack, **7.73** lb/TBtu on average, with above **95%** Hg (0)
- EMO was observed to produce above **96.5%** Hg oxidization efficiency, improved from **5%**
- EMO was observed to produce above **83.5%** overall Hg removal efficiency
- Combined with Trona, EMO still produced Hg oxidization rat **91.7%** Hg oxidization efficiency, overall Hg removal efficiency decreased down to **53.1%**
- Combined with Trona/PAC, EMO produced Hg oxidization rat **99.0%** Hg oxidization efficiency, overall Hg removal efficiency was determined at **92.3%**

Reference Unit 2 Testing Arrangement

- 190 MW, SCR +ESP +FGD, 100% Bituminous

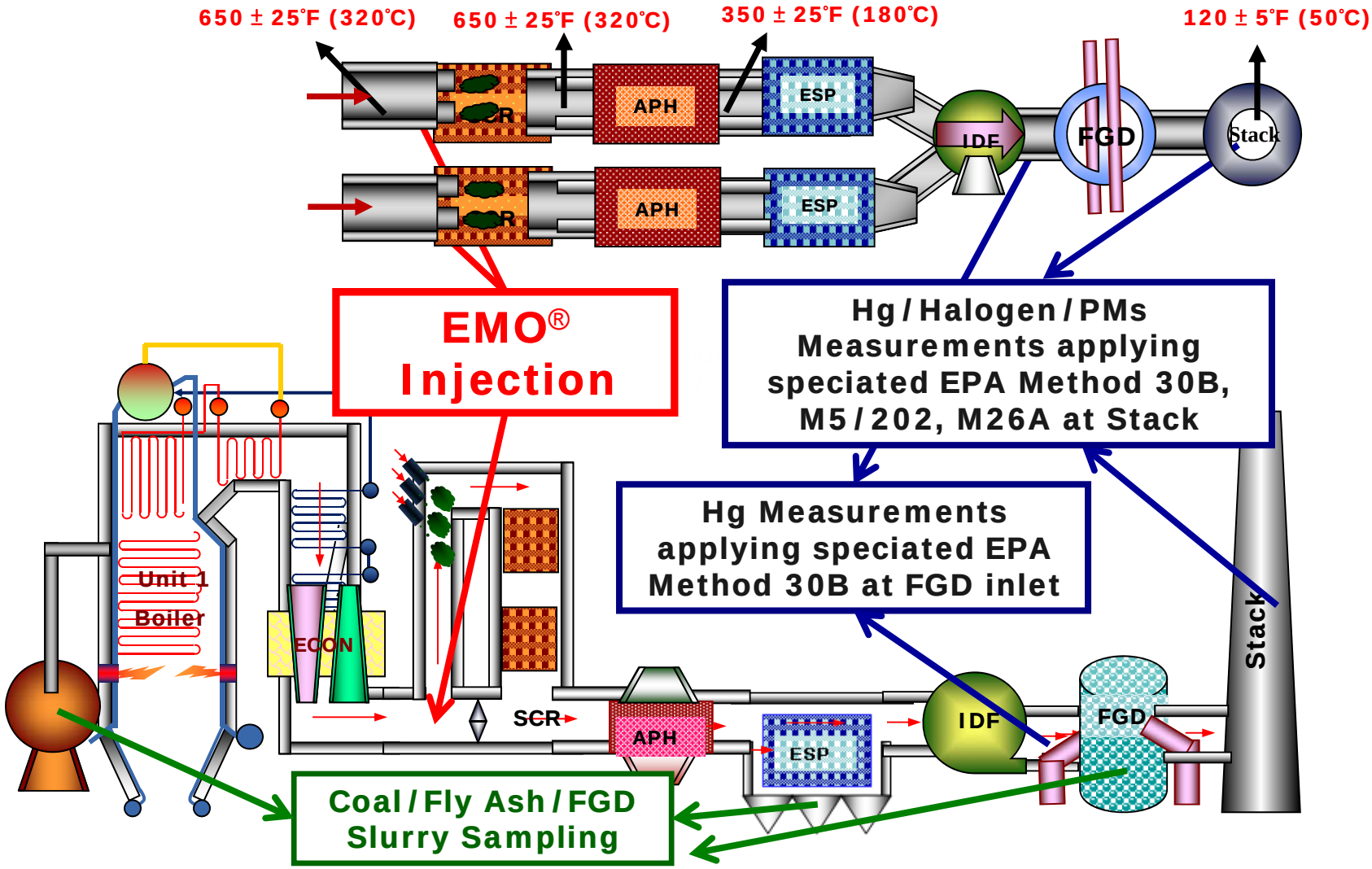

Reference Unit 2 Hg Data Overview

Date	End Time	Unit Load	Max. Hg in Coal	EMO Injection Rate	FGD inlet Hg (0)	FGD inlet Total Hg	ESP Hg Removal	Hg Oxidization FGD Inlet	Stack Hg (0)	Stack Total Hg	Overall System Hg Removal
mm/dd/yy	(HH:MM)	(MW)	(lb/TBtu)	(ppmvd)	(lb/TBtu)	(lb/TBtu)	(%)	(%)	(lb/TBtu)	(lb/TBtu)	(%)
8/16/12	12:30	191.0	5.9	0	0.84	4.30	27.3%	85.9%	1.15	1.15	80.5%
	14:35	190.9	5.9	0	0.94	3.99	32.4%	58.3%	1.49	1.49	74.8%
8/17/12	12:00	190.8	6.5	3.8	0.44	2.66	58.7%	93.2%	0.58	0.58	91.0%
	15:00	191.0	6.5	7.4	0.00	3.16	51.0%	100.0%	0.64	0.72	88.8%
	17:30	191.2	6.5	9.8	0.00	3.13	51.5%	100.0%	0.61	0.71	89.0%
8/18/12	12:00	190.8	6.8	3.4	0.10	3.72	45.2%	98.5%	0.81	0.89	86.8%
	15:00	190.8	6.8	2.9	0.10	3.83	43.5%	98.6%	0.75	0.81	88.0%

- The optimal EMO® rate was further reduced down to **3.2** ppmv
- Baseline Hg oxidization efficiency at the FGD inlet : **72.1%;** Baseline overall Hg removal efficiency: **77.7%**
- Stack Hg (0): **1.32** lb/TBtu, Hg (T): **1.32** lb/TBtu
- EMO® optimal at **3.2** ppmv: Hg oxidization efficiency at the FGD inlet : **96.8%;** Overall Hg removal: **88.6%:**
- Stack Hg (0): **0.71** lb/TBtu, Hg (T): **0.76** lb/TBtu

Reference Unit 2 Hg Data Overview

Date	End Time	Unit Load	Max. Hg in Coal	EMO Injection Rate	FGD inlet Hg (0)	FGD inlet Total Hg	ESP Hg Removal	Hg Oxidization FGD Inlet	Stack Hg (0)	Stack Total Hg	Overall System Hg Removal
mm/dd/yy	(HH:MM)	(MW)	(lb/TBtu)	(ppmvd)	(lb/TBtu)	(lb/TBtu)	(%)	(%)	(lb/TBtu)	(lb/TBtu)	(%)
8/16/12	12:30	191.0	5.9	0	0.84	4.30	27.3%	85.9%	1.15	1.15	80.5%
	14:35	190.9	5.9	0	0.94	3.99	32.4%	58.3%	1.49	1.49	74.8%
8/17/12	12:00	190.8	6.5	3.8	0.44	2.66	58.7%	93.2%	0.58	0.58	91.0%
	15:00	191.0	6.5	7.4	0.00	3.16	51.0%	100.0%	0.64	0.72	88.8%
	17:30	191.2	6.5	9.8	0.00	3.13	51.5%	100.0%	0.61	0.71	89.0%
8/18/12	12:00	190.8	6.8	3.4	0.10	3.72	45.2%	98.5%	0.81	0.89	86.8%
	15:00	190.8	6.8	2.9	0.10	3.83	43.5%	98.6%	0.75	0.81	88.0%

- Hg content in coal was observed to vary between **5.9** and **6.8** lb/TBtu
- Hg re-emission was observed during the baseline testing: FGD inlet Hg(0): **0.89** lb/TBtu; Stack Hg (0): **1.32** lb/TBtu
- At the Optimal EMO® at **3.2** ppmv, Hg Reemission was observed to improve
- FGD inlet Hg(0): **0.21** lb/TBtu; Stack Hg (0): **0.71** lb/TBtu

Fly Ash Analysis and other MATS Compliance

Sample Name	Date (2012)	Hg Concentration (ppm)	TCLP Metals, mg/L								% Loss On Ignition
			Arsenic	Barium	Cadmium	Chromium	Lead	Mercury	Selenium	Silver	
Unit 33 FA Hopper#6 8/16/12	8/16	0.111	<0.0125	0.396	<0.0125	0.025	<0.0125	<0.002	0.041	<0.0125	4.11
Unit 33 FA Hopper#6 8/17/12	8/17	0.180	<0.0125	0.404	<0.0125	0.038	<0.0125	<0.002	0.066	<0.0125	9.88
Unit 33 FA Hopper#6 8/18/12	8/18	0.130	<0.0125	0.402	<0.0125	0.030	<0.0125	<0.002	0.077	<0.0125	6.01
Unit 33 FA Hopper#11 8/16/12	8/16	0.030	<0.0125	0.184	<0.0125	<0.0125	<0.0125	<0.002	<0.0125	<0.0125	10.2
Unit 33 FA Hopper#11 8/17/12	8/17	0.044	<0.0125	0.191	0.016	<0.0125	<0.0125	<0.002	<0.0125	<0.0125	24.5
Unit 33 FA Hopper#11 8/18/12	8/18	0.036	<0.0125	0.746	<0.0125	<0.0125	<0.0125	<0.002	0.023	<0.0125	7.39
Reg. Limit (mg/L)			**5.0**	**100**	**1.0**	**5.0**	**5.0**	**0.2**	**1.0**	**5.0**	

- None of the fly ash sample failed the National TCLP requirements on the metals
- None of the Method 5 runs were observed to fail the MATS PM compliance limit of **0.03** lb/MMBtu: The stack FPM was improved by **37.8%** at the Optimal EMO® at **3.2** ppmv
- None of the Method 26A runs were observed to fail the MATS HCl compliance limit of **0.002** lb/MMBtu
- The material cost for continuous EMO® injection at **3.2** ppmv for this reference unit is estimated at **$438K** per year

Reference Unit 3 Testing Arrangement

- 440 MW, ESP +FGD, 100% Lignite

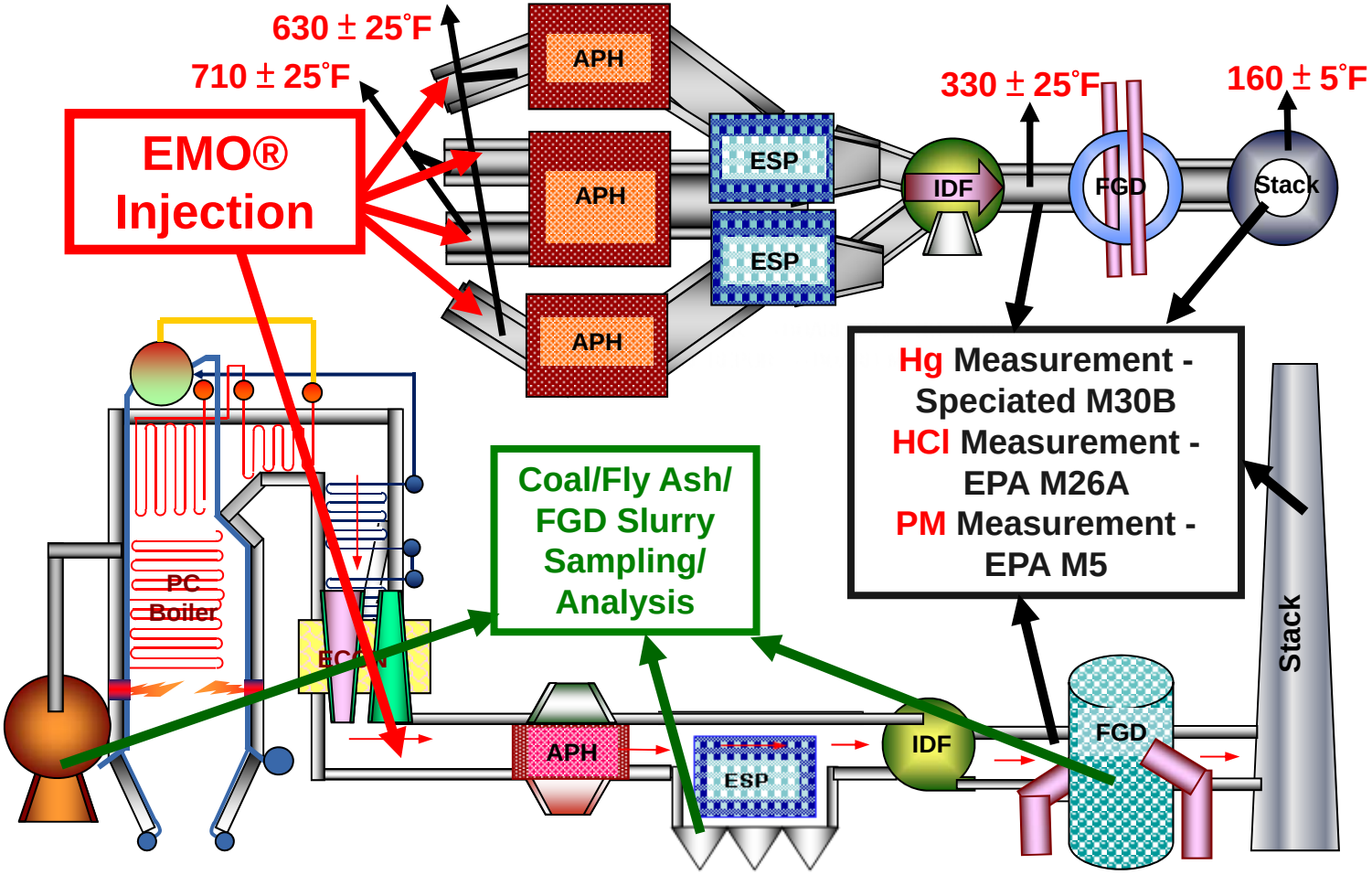

EMO® Phase I Overview (11/14/2011-11/17/2011)

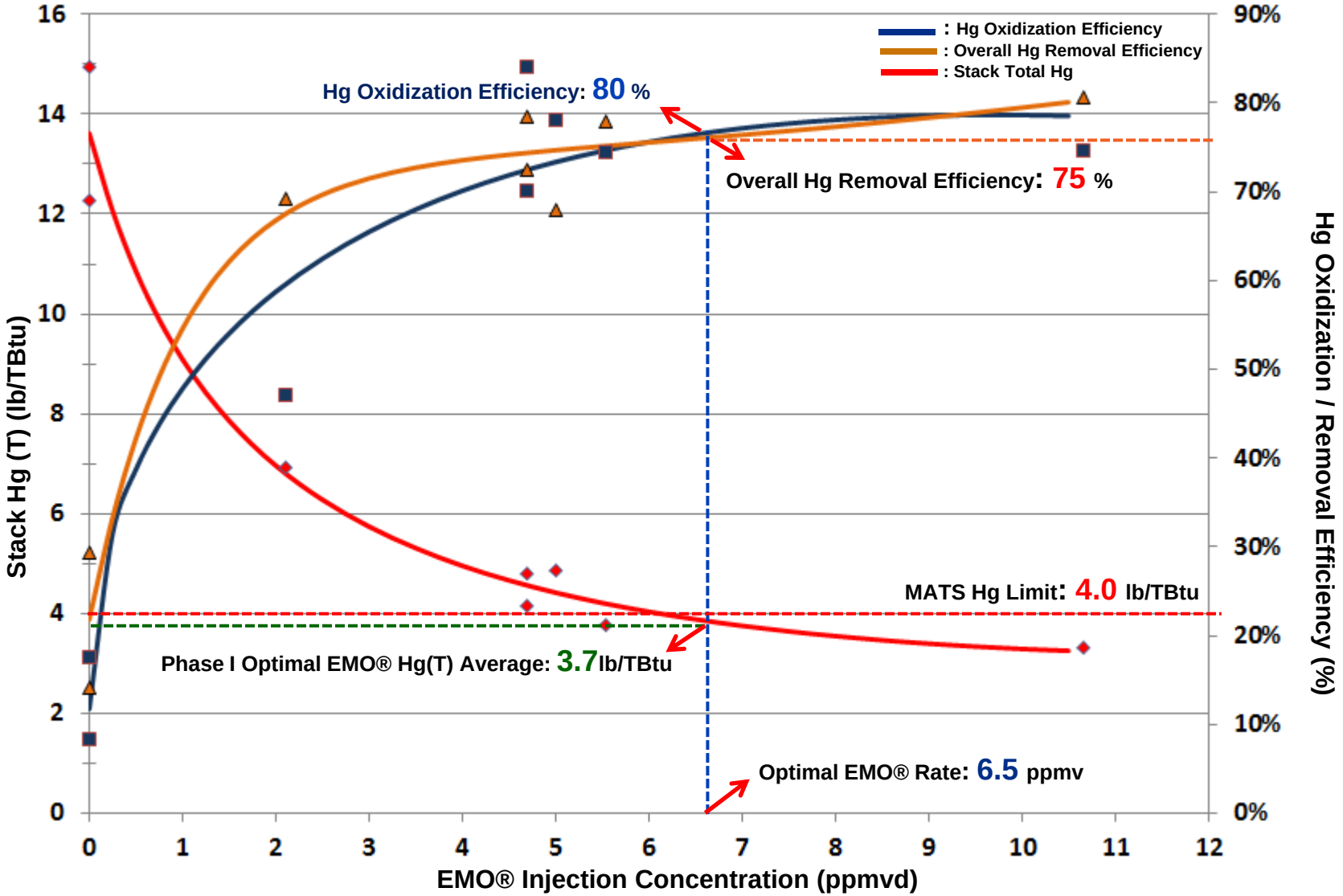

- Hg content in coal varied between **15.1** and **22.4** lb/TBtu, averaged at **18.0** lb/TBtu

EMO® Phase II Overview (5/22/2012 – 6/12/2012)

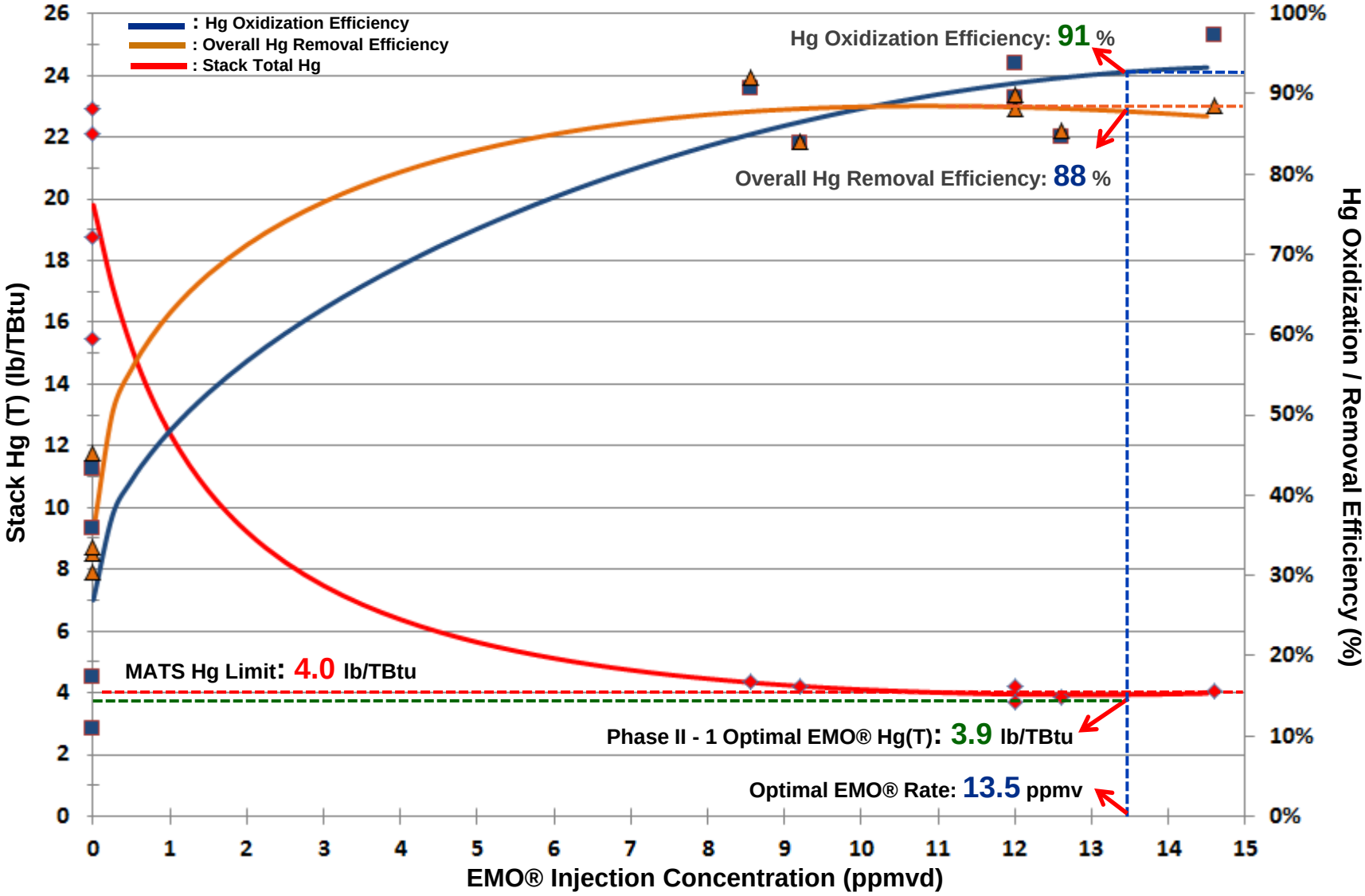

- Hg content in coal varied between **26.6** and **54.1** lb/TBtu, averaged at **33.7** lb/TBtu, Phase 1: **18.0** lb/TBtu

Reference Unit 3 Economics Analysis

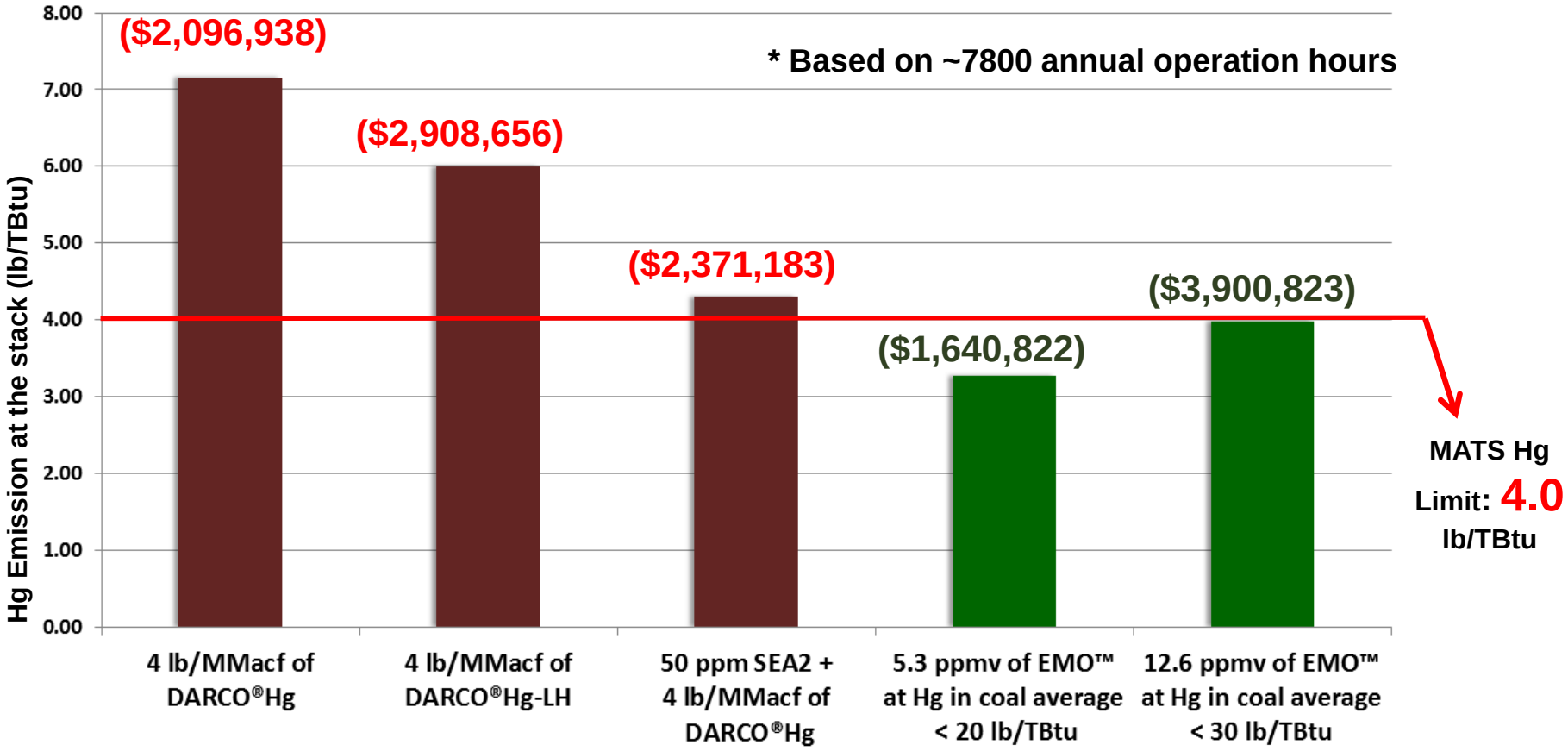

- The cost estimates for **the first 3 non-EMO™ injection options** were based on Hg Content in coal **~20** lb/TBtu. **None of them demonstrated MATS compliance!**

EMO's Co-benefit for Reducing ABS across APH

Ammonium bisulfate

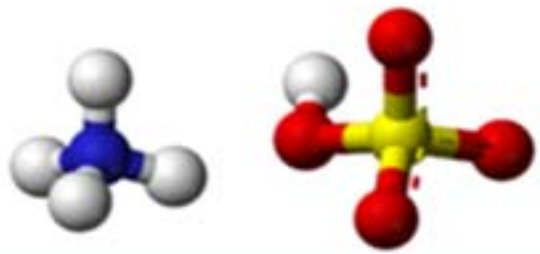

Properties	
Molecular formula	$(NH_4)HSO_4$
Molar mass	115.11 g/mol
Appearance	White solid
Density	1.78 g/cm^3
Melting point	147 °C, 420 K, 297 °F
Solubility in water	Very soluble
Solubility in other solvents	Soluble in methanol insoluble in acetone

Ammonium bromide

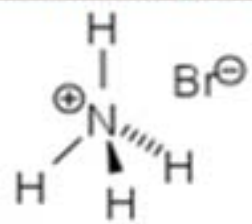

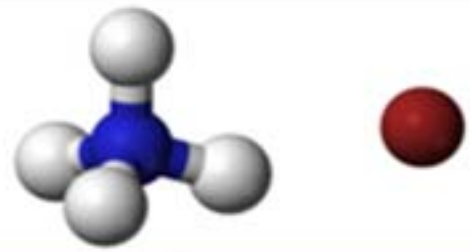

Properties	
Molecular formula	NH_4Br
Molar mass	97.94 g/mol
Appearance	white powder, hygroscopic
Density	2.429 g/cm^3
Melting point	452 °C, 725 K, 846 °F
Solubility in water	60.6 g/100 mL (0 °C) 78.3 g/100 mL (25 °C) 145 g/100 mL (100 °C)
Refractive index (n_D)	1.712

EMO's Co-benefit for Reducing ABS across APH

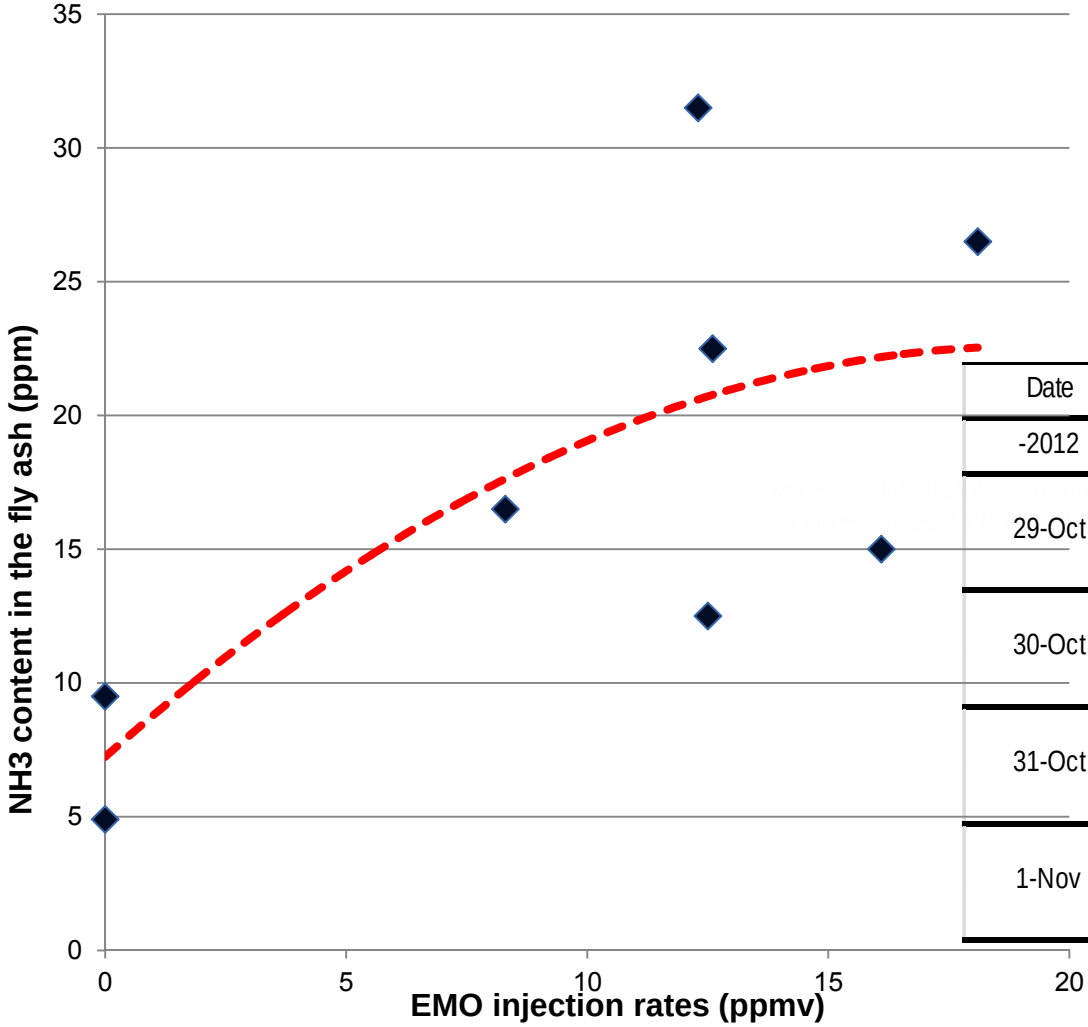

Date	Run	Condition	EMO Dose	NH_3
-2012			ppmv	mg/kg
29-Oct	1	Baseline	0	9.5
	2	Baseline	0	4.9
30-Oct	1	Parametric	8.3	16.5
	2	Parametric	16.1	15
31-Oct	1	Parametric	12.5	12.5
	2	Parametric	18.1	26.5
1-Nov	1	Optimal	12.3	31.5
	2	Optimal	12.6	22.5

- Ammonia (NH_3) content of fly ash increased concurrent with EMO injections. At **12.4** ppmv of EMO injection, the NH3 in the fly ash was observed to increase by **200%**

Unit 1 NH3 Analyses – Fly Ash/ FGD Slurry

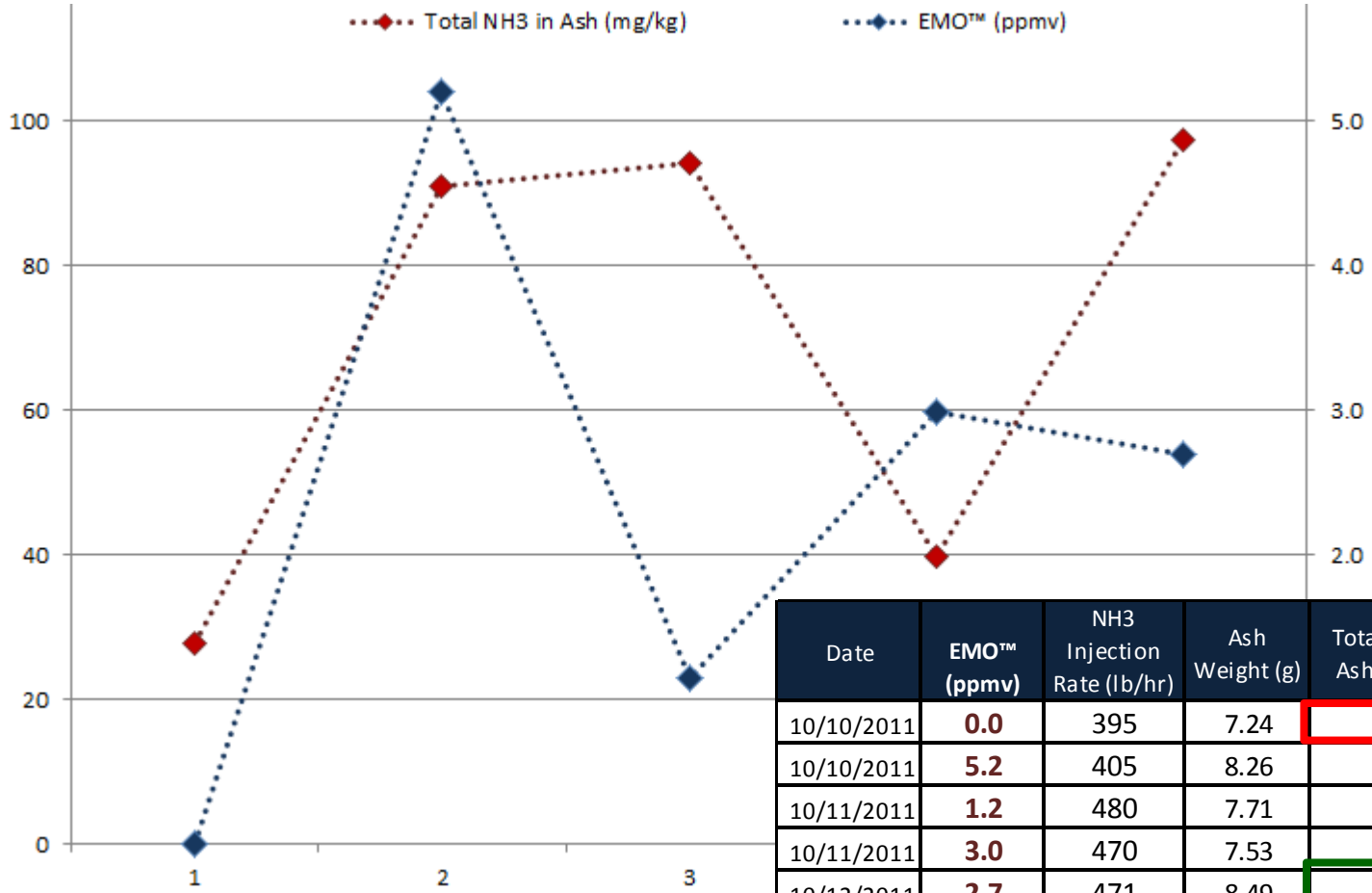

Date	EMO™ (ppmv)	NH3 Injection Rate (lb/hr)	Ash Weight (g)	Total NH3 in Ash (mg/kg)	Slurry Cake Weight (g)	Total NH3 in Slurry (mg/kg)
10/10/2011	**0.0**	395	7.24	**28**	26.45	**3.71**
10/10/2011	**5.2**	405	8.26	**91**	26.15	**3.39**
10/11/2011	**1.2**	480	7.71	**94**	27.77	**3.43**
10/11/2011	**3.0**	470	7.53	**40**	26.79	**3.48**
10/12/2011	**2.7**	471	8.49	**97**	26.76	**3.13**

- As EMO™ increased, the total NH3 in ash increased, Baseline: **28** ppm; EMO Optimal: **97** ppm; increased by **246**%

Can Ca(Br)2 Produce the Same Results? Not Really

Sampling Date	Test Condition	Start Time	End Time	CaBr2 Target	EMO Target	Hydrogen Bromide M26A FGD inlet	Hydrogen Bromide M26A Stack	Relative Deviation	Hg Oxidization Efficiency	Stack Hg Removal Efficiency
				ppm	ppmvd	ppmvd	ppmvd	%	%	%
7/12/2012	EMO - Baseline	9:00	10:00	0	0	0.18	0.10		17%	25%
7/12/2012	EMO - Baseline	11:15	12:15	0	0	0.09	0.10		6%	21%
7/12/2012	EMO Parametric	17:00	18:00	0	2.9	4.48	0.10	21%	54%	57%
7/13/2012	EMO Parametric	10:40	11:40	0	5.5	5.78	0.10	3%	71%	60%
7/16/2012	Trona - Baseline	8:00	9:00	260	0	3.27	0.10		61%	51%
7/16/2012	Trona - Baseline	9:30	10:30	260	0	3.47	0.10		61%	50%

✓ Blending **260** ppm of $Ca(Br)_2$ blending in coal requires 57 lb/hr $Ca(Br)_2$ (110 lb/hr of 52% Ca(Br)2 solution). This equates to 0.28 lb-mol of $Ca(Br)_2$, which generates **0.56** lb-mol available Br material in flue gas in the form of Br2 or HBr.

✓ For **3.3** ppmv EMO™ injection at 195 MW gross generation, it would require 23.1 lb/hr of HBr injection (48 lb/hr of 48% HBr solution). This equates to **0.29** lb-mol of HBr, which generates 0.29 lb-mol available Br in flue gas.

✓ Hence applying $Ca(Br)_2$ could put approximately **50%** of the Br material to waste (**0.29** lb-mol **vs.** **0.56** lb-mol),

✓the difference in annual cost is approximately **$120K** for a 200 MW unit

✓HBr is a more effective material promoting Hg oxidization

Observations & Recommendations

- EMO® Injection successfully demonstrated Hg compliance to MATS **>90%** plus stack Hg oxidization efficiency), for **Lignite, Bituminous, & Sub-Bituminous**
- EMO® has been repeatedly observed to Improve Hg re-emission across the scrubber with a means of precise control
- EMO® injection does not create impact for the fly ash beneficial use/disposal (No metal leaching issues observed)
- EMO reduced ABS formation across the APH to prevent plugging issues – **AS a means of neutralizing the NH3 slip to prevent the APH plugging**
- EMO® was proven to be **~70%** more cost-effective than PAC injection and **~50%** more cost-effective than other fuel halogen additives, such as Ca(Br2)

CONTACT

Bobby I.T. Chen

Client Program Manager

+1 865.670.2687 – Direct

+1 865.360.2823 – Cell

bobby.chen@cbi.com

Randall P. Moore

Business Line Manager

+1 865.694.7455 – Direct

+1 865.604.3945 – Cell

randall.moore@cbi.com