Oil & Gas Safety and Health CONFERENCE 2016 OSHA® Exploration & Production

Control of Respirable Crystalline Silica Release from Sand Movers in Oil and Gas Extraction

Travis Anderson, NOV

Eric J. Esswein, NIOSH

Santo Petito, Airis Wellsite Services

John Saldickas, ArrMaz

Matt Navea, Preferred Sands

Sources of Respirable Crystalline Silica (RCS)

- NIOSH researchers identified major sources of RCS generation/release:
  - Thief hatches on top of sand movers
  - Uncapped side fill ports
  - Vehicular traffic
  - Transfer belt under sand movers
  - Sand dropping or mixing in belt or blender area
  - Transfer belts from sand movers to blenders
  - End of sand mover conveyor belt

1. Release from top hatches of FracSanders

Photo Courtesy Eric J. Esswein, NIOSH

By far, the greatest amount of dust is generated during Bin Loading as shown.

Photo Courtesy of Michael J. Breitenstein, NIOSH

2. Transfer Belt under the FracSanders

3. Site Traffic / Road Dust

Appco

4. Sand Dropping in Blender Hopper

5. Release from MultiSander Operations

6. Release from Stinger

7. Dust Ejected from Open Fill Ports

Appco

Travis Anderson

National Oilwell Varco

Typical FracSite

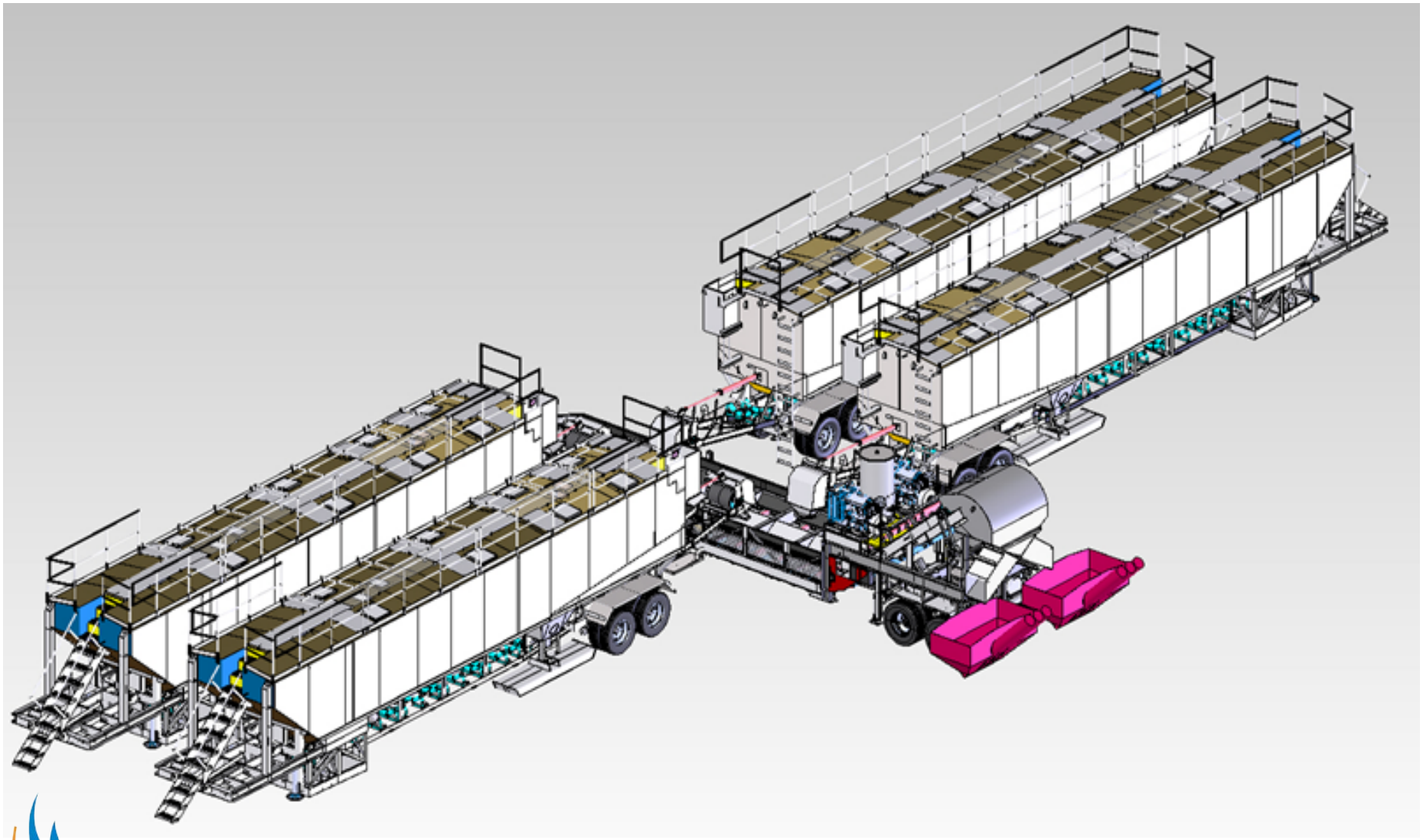

Typical FracSander Cross-Section

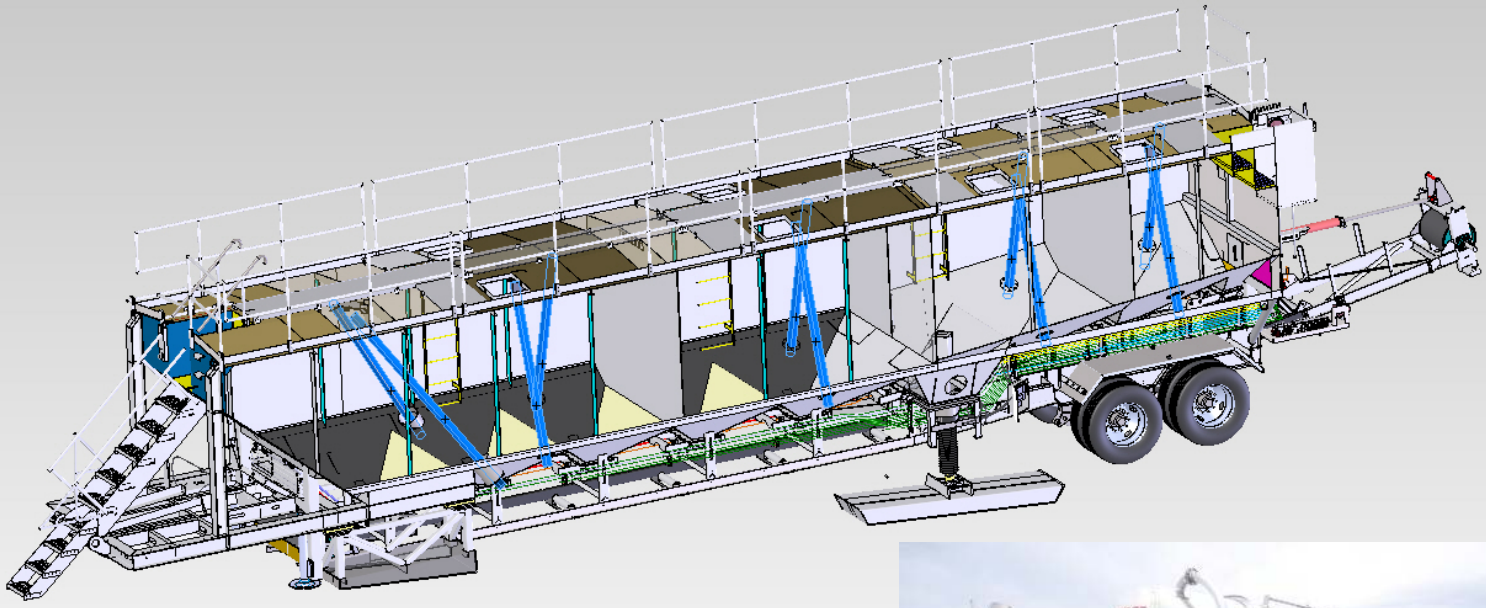

FracSander Mounted Dust Collection System

- 20 Drop-in Pleated Polyester Cartridges, 580 sq.in. Total Filter Area 99.9% Efficiency @2 Microns
- Reverse/Pulse Cleaning
- Pulse-Jet Solenoid Valves mounted in NEMA 4 Enclosure
- Pyramidal Discharge Hopper
- Internal Inlet Duct with Air Diffuser and Sand Separator
- Integrated Suction Fan 3560 CFM @ 4500 RPM
- Allows up to four (4) Pneumatic Trailers (~900 cfm max each) to fill the FracSander simultaneously
- Magnehelic Differential Pressure Gauge for Filter Condition monitoring
- Fill Pipe End Caps
- Sealed Roof Hatches with Integrated Pressure Relief
- 50 gal Dust Collection Barrel with Service Valve, Transition and Flex Hose

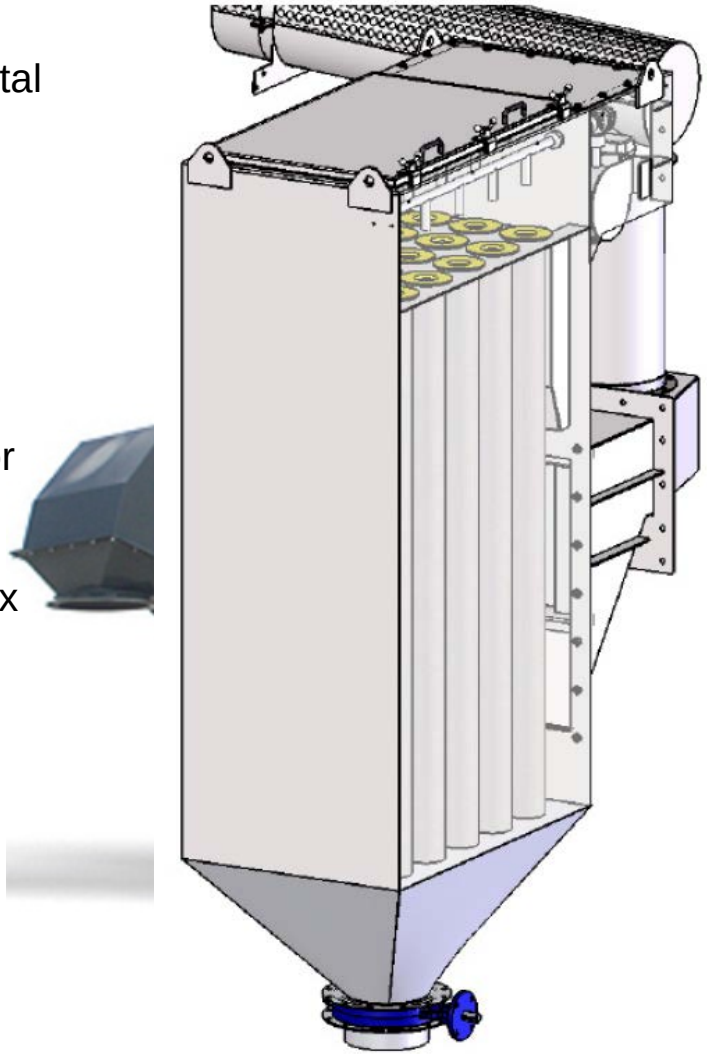

Dust Collection System Components

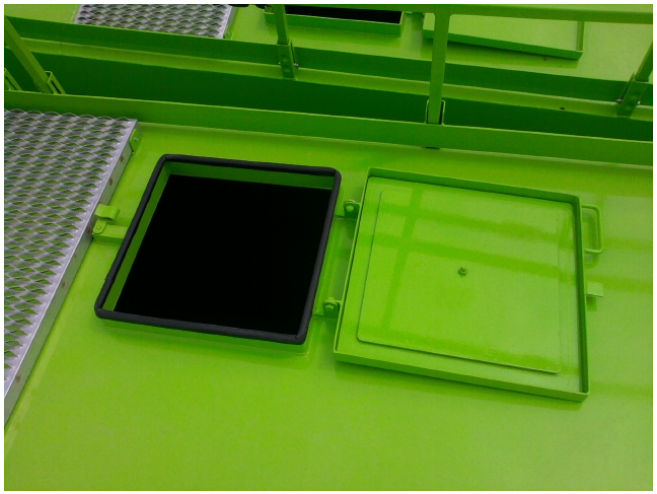

Dust Collection System Method of Operation

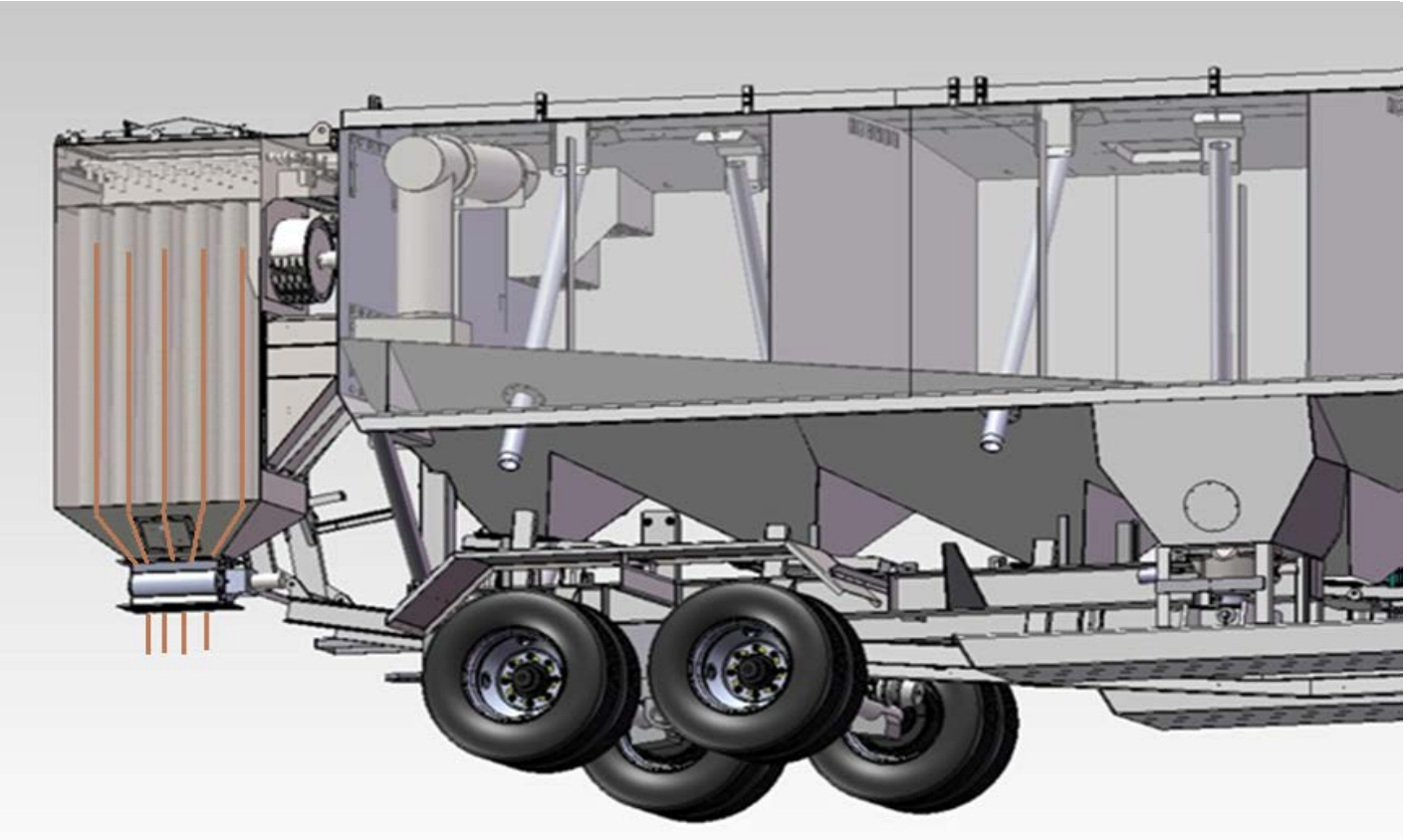

Dust Collection System Daisy-Chain

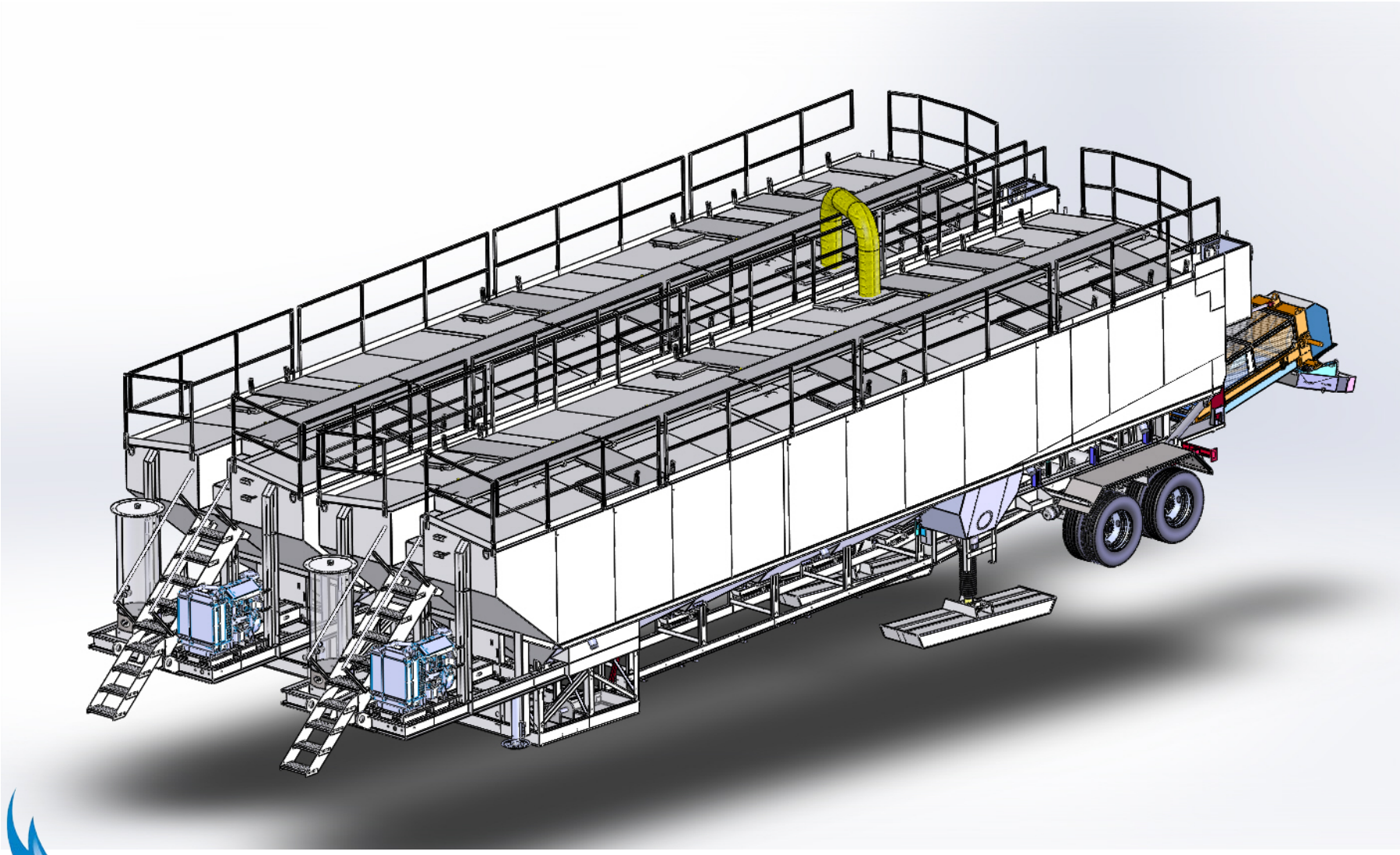

Competitor Unit Retrofit

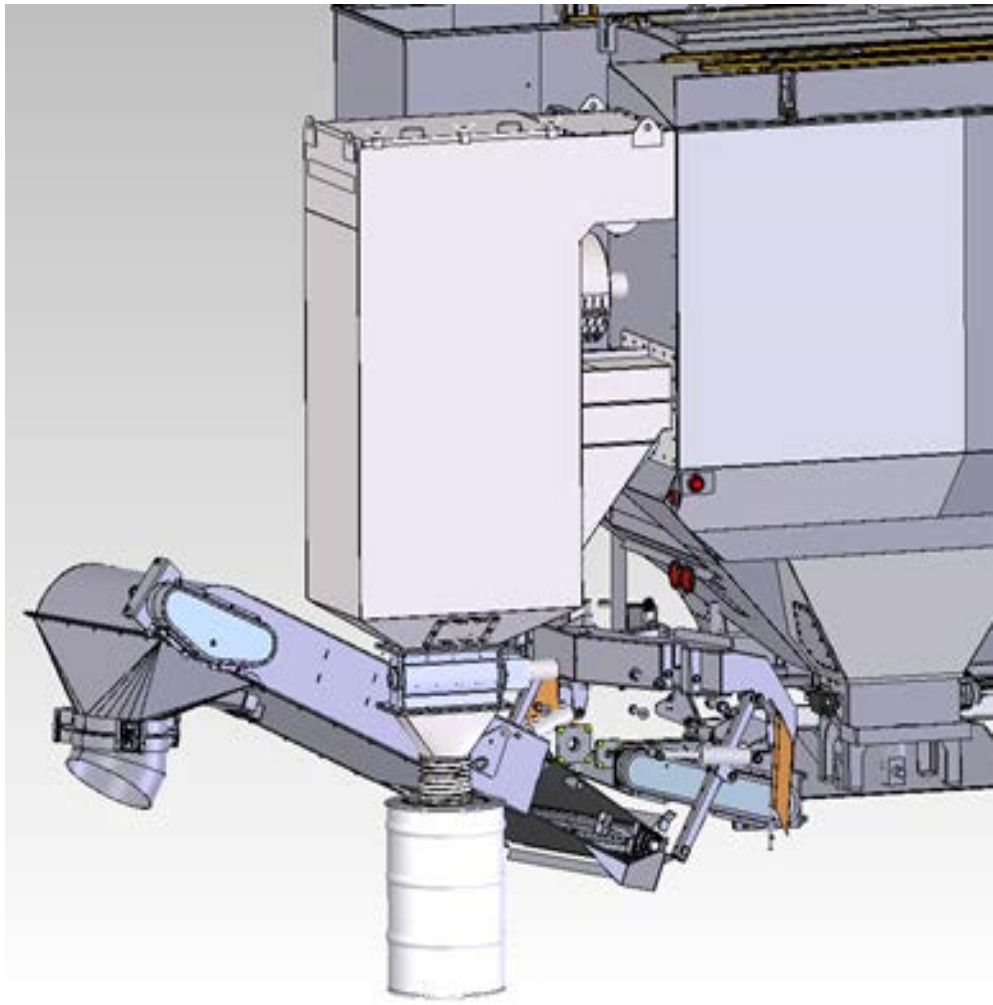

Bin 4 Overfill Prevention

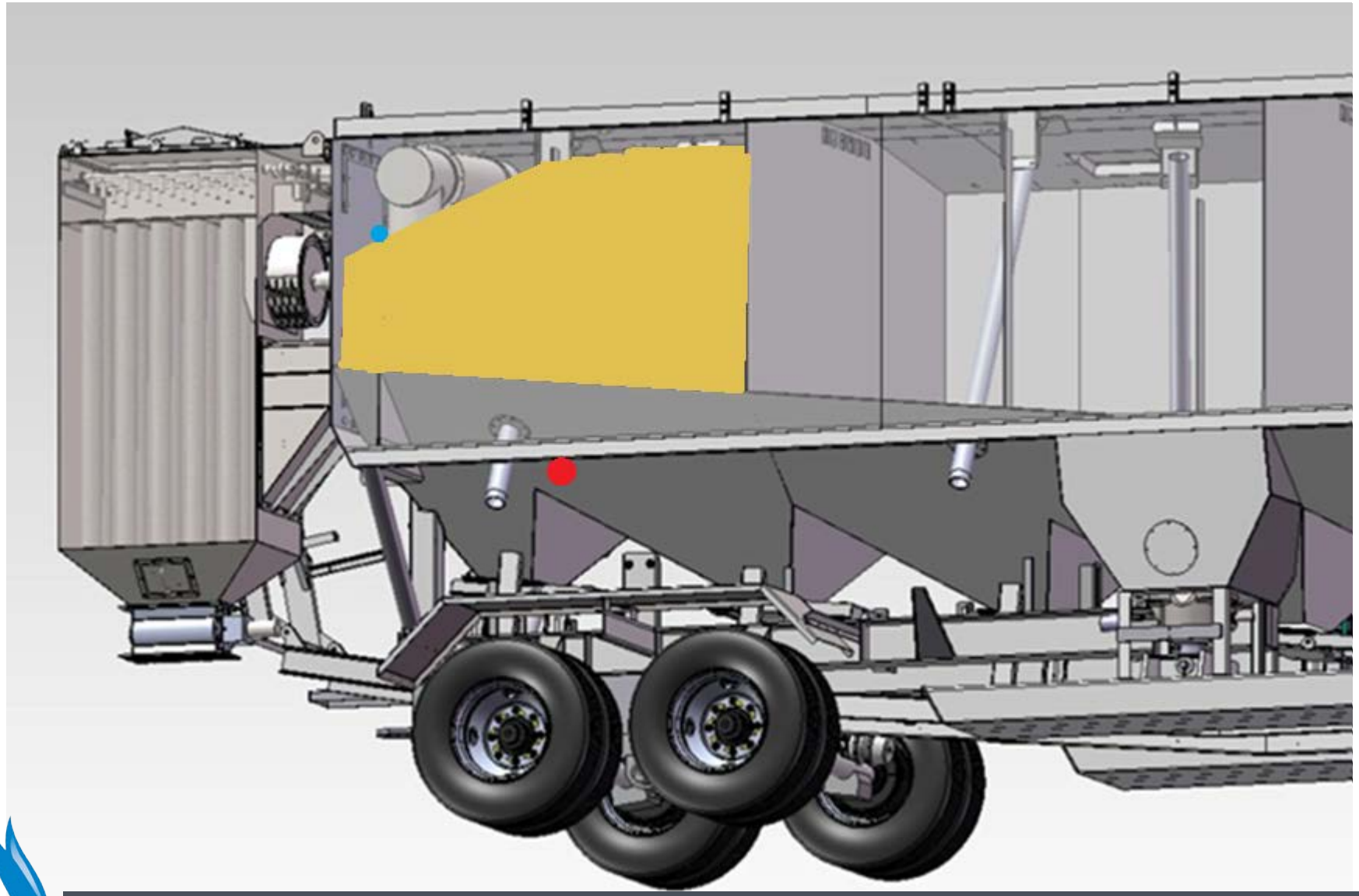

Bin 4 Overfill Prevention

Bin Gate Material Control Skirts

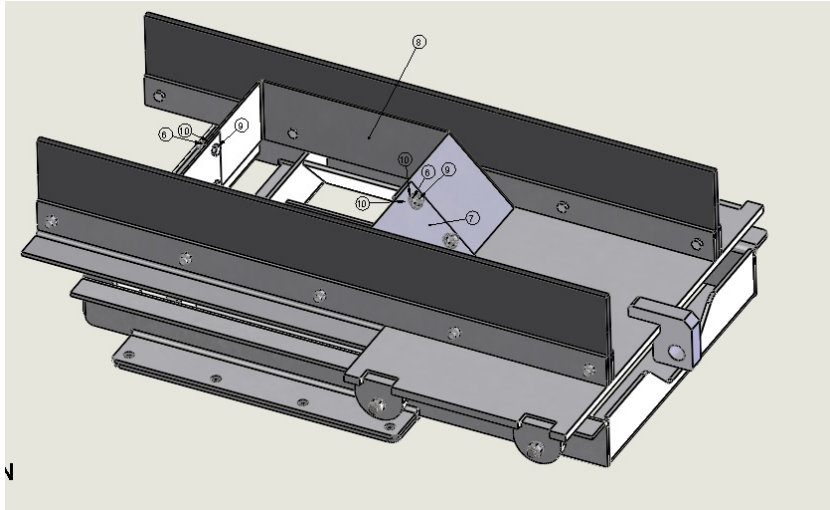

Sand Launching and Aeration

Stinger Discharge Chutes

For Additional Information

Travis Anderson
National Oilwell Varco
936-873-2600 main
210-572-4021 direct
Travis.Anderson@nov.com
www.nov.com

Eric Esswein

NIOSH

Disclaimer

The findings and conclusions in this presentation are those of the author(s) and do not necessarily represent the views of the National Institute for Occupational Safety and Health.

NIOSH Mini Baghouse Retrofit Assembly

- Proof of concept, June 2012, 2nd and 3rd generation versions
- Patent pending
- Fills immediate need: engineering control for silica dust
- A “bolt on control”
- No need to remove the sand mover from the field

2012

2014

2015

Control of Respirable Crystalline Silica Release from Sand Movers

- The 3rd generation NIOSH mini baghouse retrofit assembly was field tested at Southwestern Energy (SWN) Sand in Arkansas, 05/2015

Four filter bags were mounted on each thief hatch, instead of one

Improvements noted in filter pressure drops

Bin 2 Run

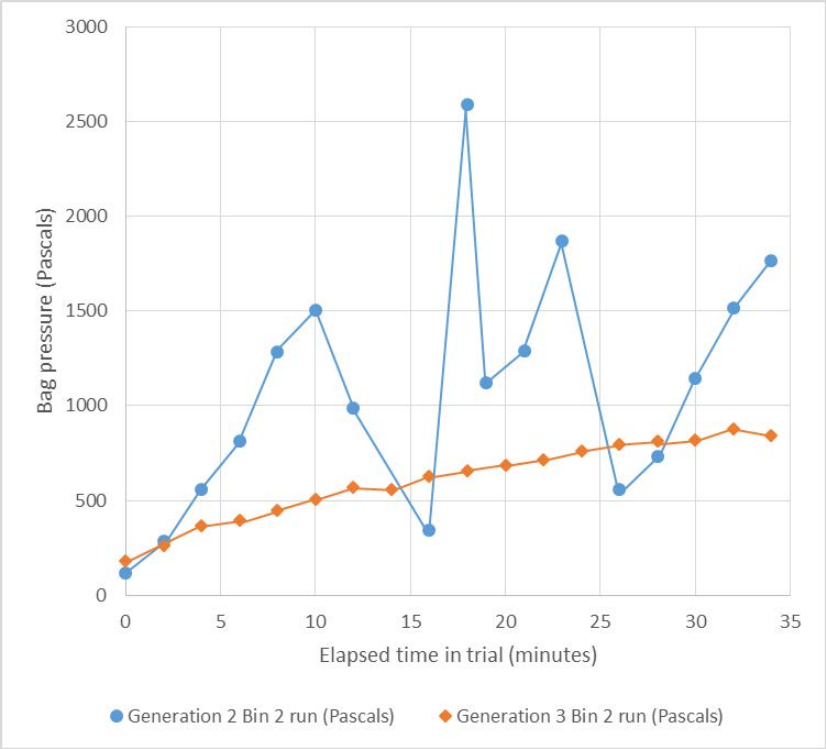

Bin 3 Run

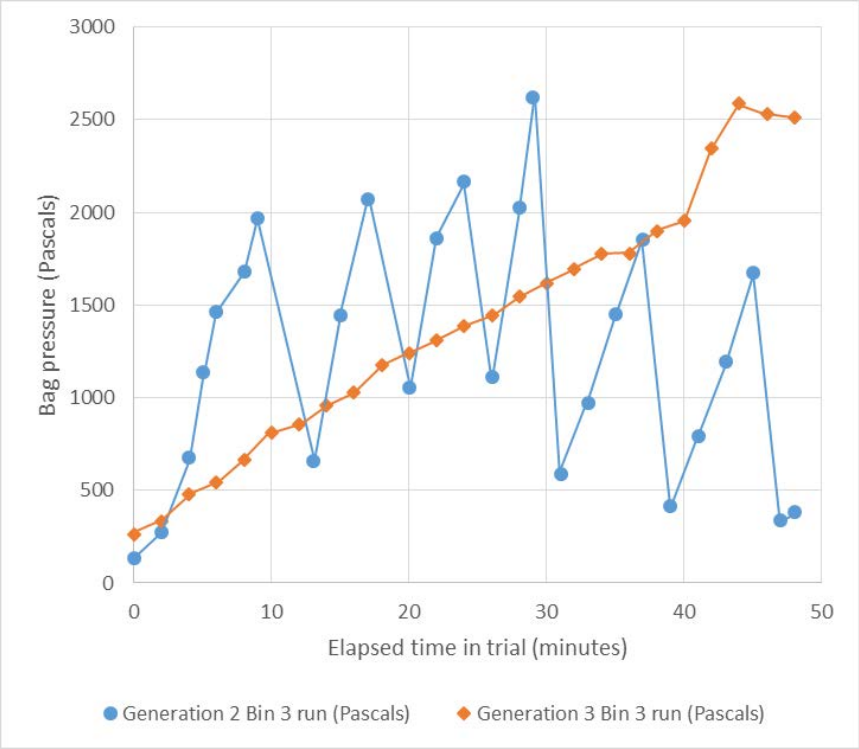

* During 2013 test, operations had to be shut down, and bags shaken, when pressures exceeded ~2000 Pa.

Effectiveness of Mini Baghouse Retrofit Assembly Generation 3 was Evaluated

- 168 area air samples were collected at 12 locations

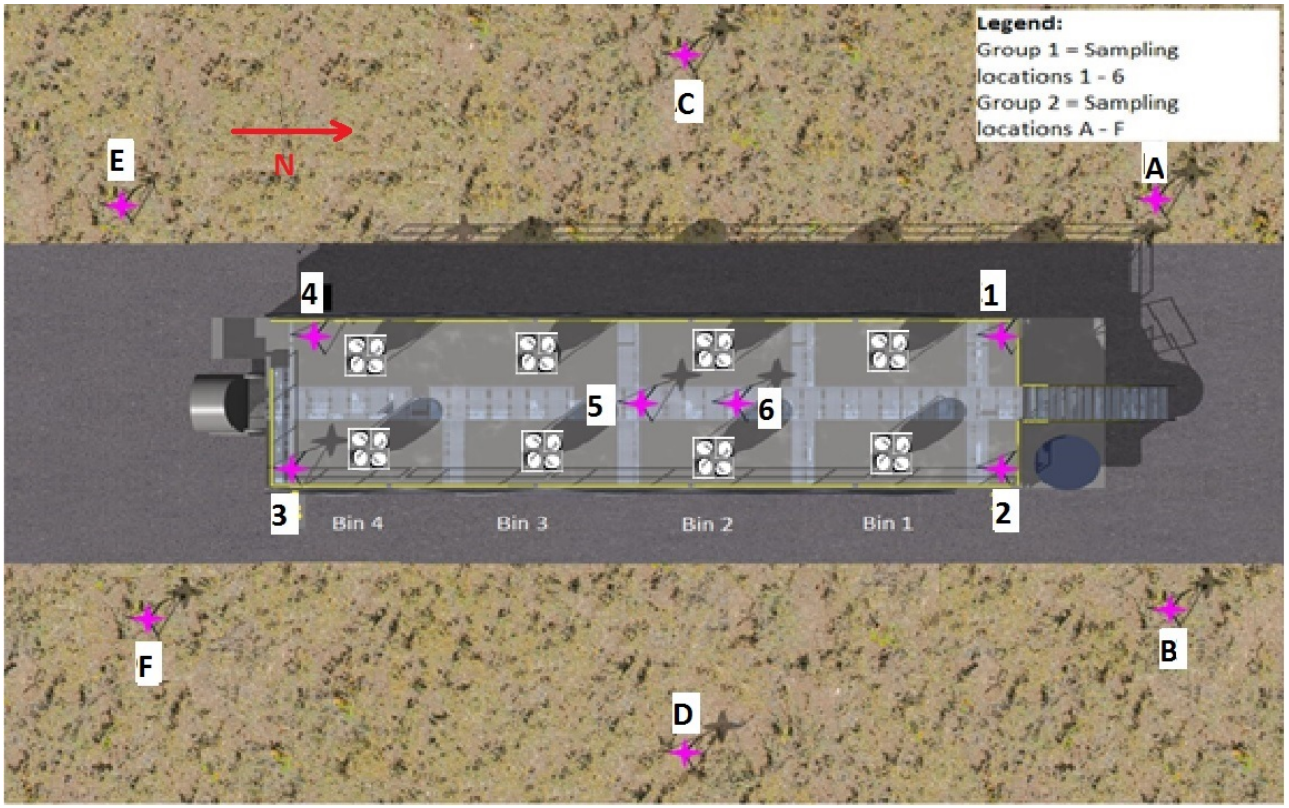

Computer rendering by Kenneth Strunk, NIOSH

Effectiveness of Mini Baghouse Retrofit Assembly Generation 3 was demonstrated Respirable Dust

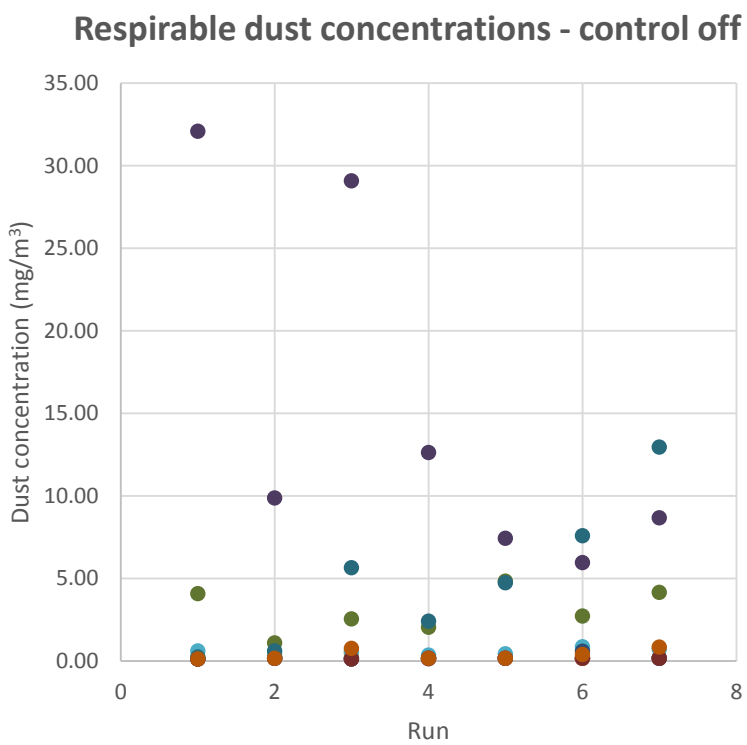

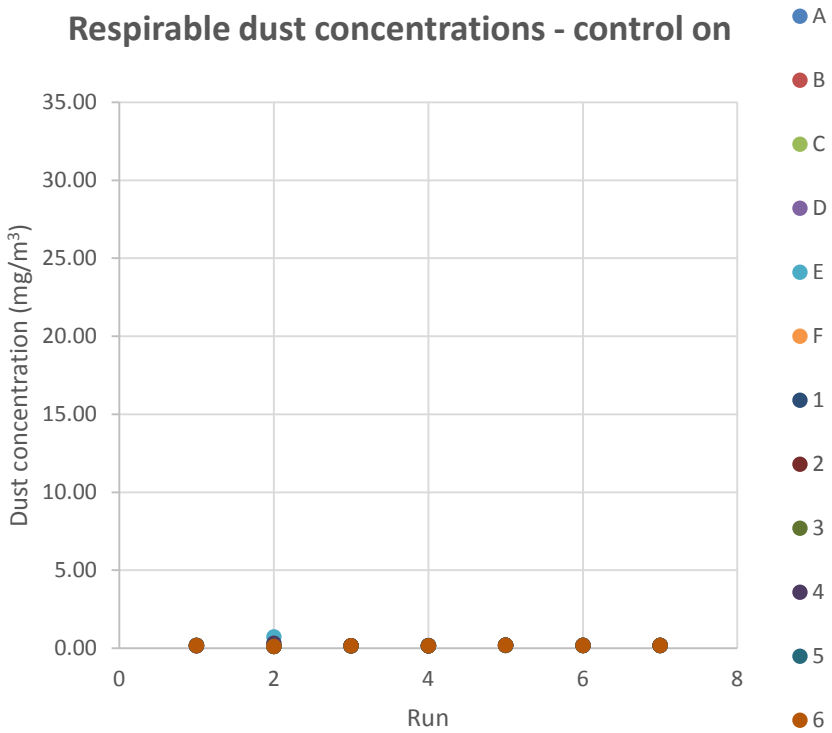

Effectiveness of Mini Baghouse Retrofit Assembly Generation 3 was demonstrated RCS

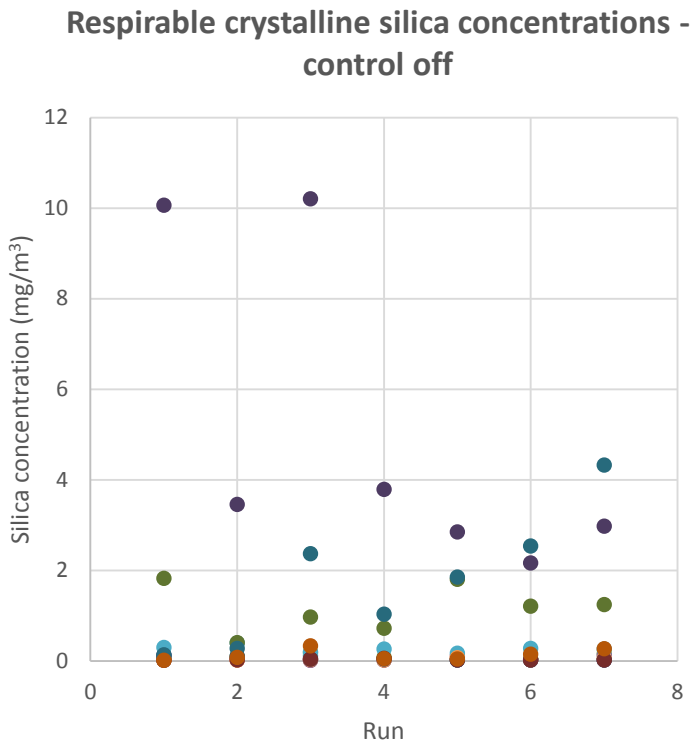

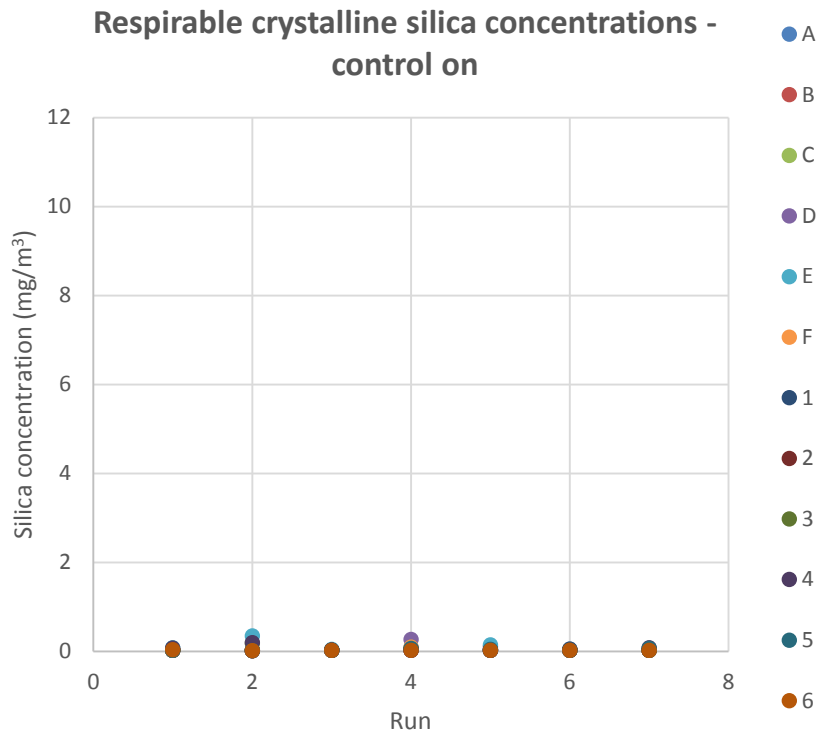

November 29-30, 2016

Effectiveness of Mini Baghouse Retrofit Assembly Generation 3 was demonstrated

Mini-Baghouse - Next steps

- Possible improvements to clamping mechanism
- Patent pending
- Form partnership for implementation
- Evaluate a range of respirable silica control technologies

Request for Assistance

- These results are preliminary
- Additional field research required
- Requesting a licensee to license and commercialize the NIOSH mini-baghouse
- Requesting additional industry partners to assist in further evaluating respirable silica control technologies
- Communication of initial research results: NIOSH Science Blog, journal article, conference presentations

For Additional Information

Eric Esswein
NIOSH
eje1@cdc.gov

Santo Petitto

Airis Wellsite Services

AIRIS - PATENTED DUST MITIGATION SYSTEM

- **Non-disruptive:** Unique raised equipment achieves total dust control without interference or generation of hazards
- **Universal:** Total dust control solution fits any pressure pumper's sand moving equipment
- **Responsive:** Focused on providing total solutions customized for individual operator needs
- **Comprehensive:** Aiming for "total compliance," we help operators craft and execute OSHA-required Exposure Control Plans

INDUSTRIAL HYGIENE TESTING

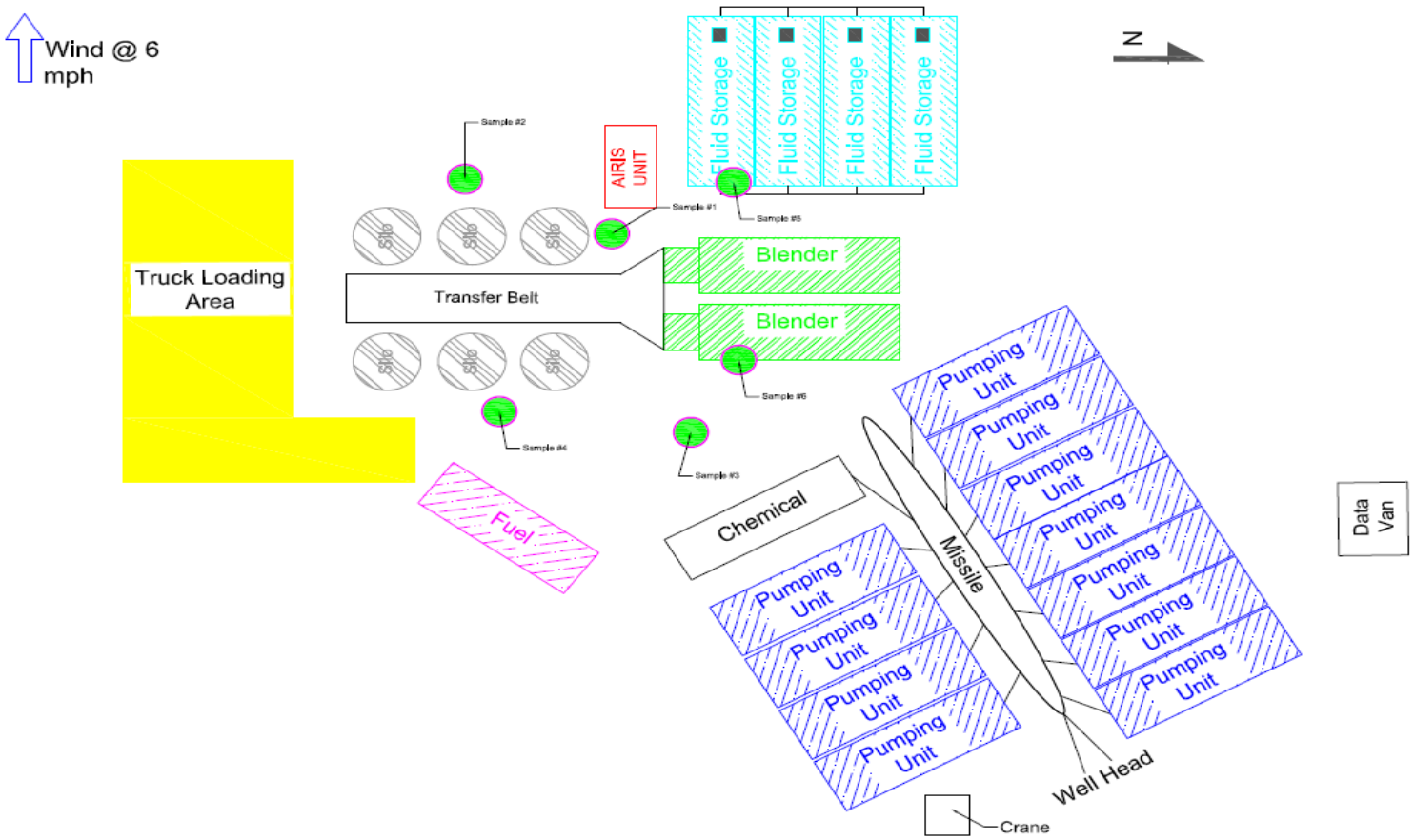

TESTING BENEATH THE ACTION LEVEL

SAMPLE NUMBER	AREA MONITOR	LAB ANALYSIS	ACTION LEVEL
1	NORTH WEST SILO, TBELT & BLENDER BEHIND AIRIS UNIT	0.010 mg/m^3	0.025 mg/m^3
2	WEST CENTER SILO	0.015 mg/m^3	0.025 mg/m^3
3	EAST OF BLENDER, NEAR CHEMICALS	0.022 mg/m^3	0.025 mg/m^3
4	EAST CENTER SILO	<0.006 mg/m^3	0.025 mg/m^3
5	FLUID STORAGE, NEAR BLENDER	0.009 mg/m^3	0.025 mg/m^3
6	BLENDER HANDRAIL	0.018 mg/m^3	0.025 mg/m^3

For Additional Information

Santo Petitto
Airis Wellsite Services
spetitto@airiswellsite.com
Airiswellsite.com

John Suldickas

ArrMaz

SandTec™ Introduction – How it Works

Coating sand involves 2 key aspects for proper application:

Getting the Proper Distribution of the Coating

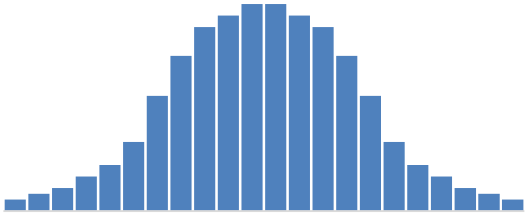

POOR – Broad Distribution

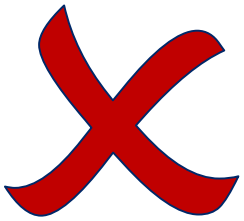

Spreading the Coating Evenly on Each Particle

POOR – Uneven Coating

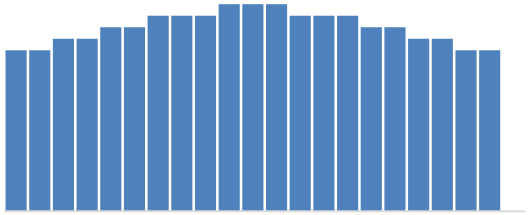

GOOD – Even Distribution

GOOD – Even Coating

ArrMaz coating system ensures a consistent, high quality product is produced.

Key Benefits

Minimizes Silica Dust During Sand Transfer & Reduces Risk of Silicosis

- Testing has shown >90% and many times >99% reduction in respirable dust levels

Provides Protection at All Locations through Supply Chain

- Mechanical systems can only treat at certain locations and not all transfer points

No Requirement to Change Existing Equipment Investments

- No need to invest in special equipment and make changes to related procedures (airslides/mountain movers/sand chiefs/sand kings/T-belts/etc.)

Key Benefits

Economically Feasible Compared to Alternative Solutions

- Sand treatment expense is low

Substantial Cost Benefits

- Brings compliance to **all** handling points throughout the supply chain
- Achieving results below the Action Limit allows avoidance of employee and site monitoring costs (potentially $7/ton)
- Equipment maintenance savings due to low dust environment (potentially $1.15/ton)

Environmentally Friendly

- The coating is non-toxic and biodegradable

Well Trial and IH Monitoring Results

- Single Well Ops
- 8.9 Million Pounds of Treated Sand
  - 0.95 million lbs 100 mesh
  - 1.0 million lbs 20/40
  - 6.9 million lbs 40/70
- Slickwater Frac Fluid
- Personnel airborne monitoring
- No other mechanical means of dust control

Laboratory Results for Respirable Silica for Personal Monitor Samples				
Monitor Type	7/7	7/8	7/9	
Personal Monitor 1				
Personal Monitor 2				
Personal Monitor 3				
Personal Monitor 4	N/A		N/A	
Personal Monitor 5	N/A		N/A	

Below Action	Action Level	Above PEL
< 0.025 mg/m3	0.025 < x < 0.05	> PEL

Visuals – Sand Bin to Blender Transfer

Visuals – Pneumatic Unloading

For Additional Information

John Suldickas
ArrMaz
jsuldickas@arrmaz.com
www.arrmaz.com

Matt Navea

Preferred Sands

For Additional Information

Matt Navea
Preferred Sands
mnavea@preferred.com

THANK YOU FOR JOINING US TODAY

If you have questions we will meet with you following this session